Rang.	Comment	Origin	Type	Signal-/TAG-No.	Path
					1
					2
					3
					4
	BAC main drive off	from page no. 80/75	0	HS 16001	5
					6
	Trip BAC	from page no. 83/61	1	US 16000	7
					8
	Partial Trip BAC	from page no. 84/67	1	US 16000_2	9
					10
	Surge protection	from page no. 93/78	1	USHHH 16045	11
					12
					13
					14
					15
					16
					17
					18
					19
					20
					21
					22
					23
					24
					25
					26
					27
					28
					29
					30
					31
					32
					33
	BAC main drive on	from page no. 80/55	1	EH 16001_del	34
	Anti surge valve open	End position switch	1	GH 16074	35
	Gas press. outlet	Y > 99%	1	HIC 16074	36
					37
					38
					39
					40
					41
					42
					43
					44
					45
					46
					47

Function

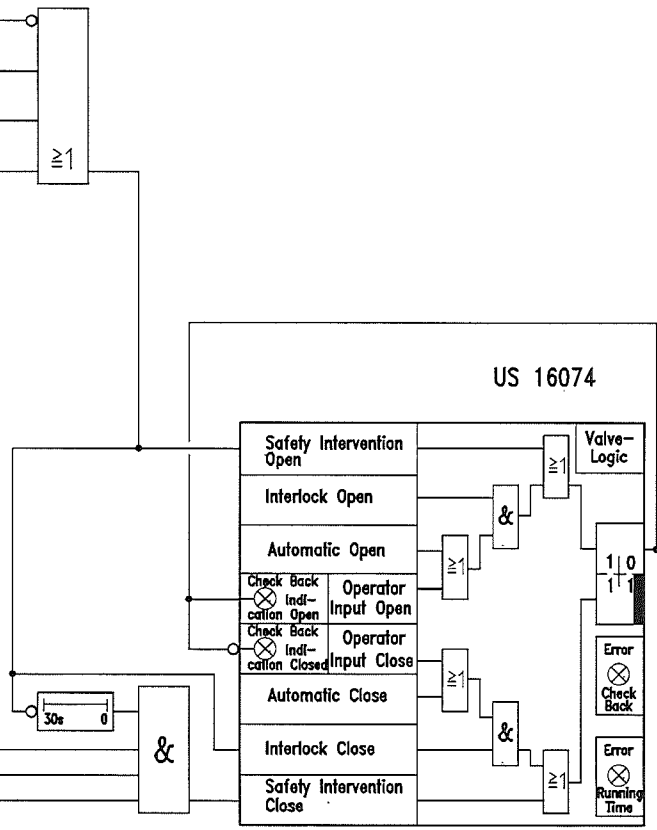

Path	Type	Signal/TAG-No.	Destination	Comment	Rang.
51					
52					
53					
54					
55					
56					
57					
58					
59					
60					
61					
62					
63					
64					
65					
66					
67					
68					
69					
70					
71					
72					
73					
74					
75					
76	0	US 16074	Solenoid valve off	Open FCV 16074	
77					
78					
79					
80					
81					
82					
83					
84					
85					
86					
87					
88					
89					
90					
91					
92					
93					
94					
95					
96					
97					
98					

JOB NO.	FILE NO	REV.	DATE	REVISIONS	BY	CHKD.
		Rev3	08.6.07	"as built"	Frohn	Stippich
		Rev2	02.2.06		Frohn	Eichler

PROJECT NAME: ASU KOSICE

PLANT PART: BOOSTER AIR COMPRESSOR

AIR LIQUIDE

Air Liquide AGS GmbH
Fütingsweg 34
47805 Krefeld

DRAWING NAME: BOOSTER AIR COMPRESSOR (BAC)

SOLENOID ANTI SURGE VALVE US16074

SIZE: A3

FUNKTION DIAGRAM

DRWG. NO.: K70101_090.dwg

PROJ. NO.: K70101

REPLACES: REPLACED BY: BASED:

DATE: 17.06.2005
AUTHOR: Frohn
CHECK: Eichler
STD.:

Comment	Origin	Type	Signal-/TAG-No.	Path
Main drive	from page no. 80/71	1	HS 16001	9
Trip BAC	from page no. 82/73	1	US 16000	11
Motor heating on	Check back signal	1	EH 16706	20

Function

Path	Type	Signal/TAG-No.	Destination	Comment
60	1	US16706_O	Signal to MCC	Motor heating on
70	1	EO 16706	Monitoring OS	Motor heating on

JOB NO.	FILE NO.	REV.	DATE	REVISIONS	BY	CHKD.
		Rev3	08.6.07	"as built"	Frohn	Stippich
		Rev2	02.2.06		Frohn	Eichler

PROJECT NAME: ASU KOSICE

PLANT PART: BOOSTER AIR COMPRESSOR

AIR LIQUIDE

Air Liquide AGS GmbH
Fütingsweg 34
47805 Krefeld

DRAWING NAME:
BOOSTER AIR COMPRESSOR (BAC)
SPARE MOTOR HEATING US 16706

SIZE: A3

FUNKTION DIAGRAM

DRWG. NO.: K70101_091.dwg

PROJ. NO.: K70101

REPLACES: REPLACED BY:

DATE: 17.06.2005
AUTHOR: Frohn
CHECK: Eichler
STD.:

BASED:

Rang.	Comment	Origin	Type	Signal-/TAG-No.	Path
	Charge press. BAC	P-transmitter	E	PT 16007	18
	Main drive BAC on	Check back signal	1	EH 16001	19
	Trip BAC	from page no. 82/75	1	US 16000	29

Function

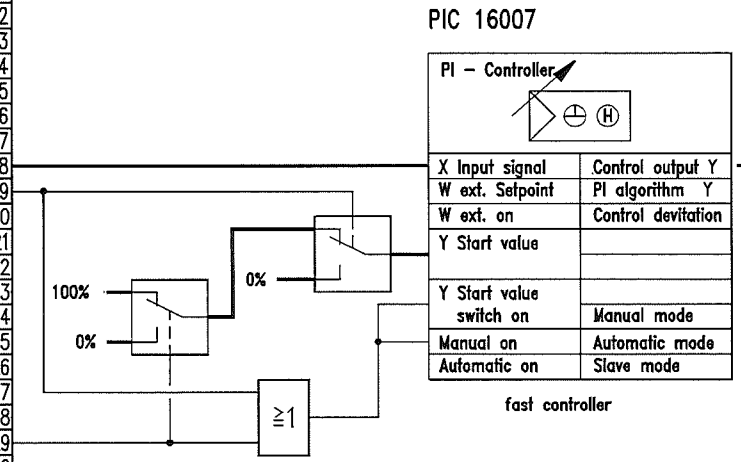

Path	Type	Signal/TAG-No.	Destination	Comment	Rang.
68	E	PK 16007	Positioner 4...20mA	Control butterfly valve	
69			= 0-100%	PK 16007	
70				Air to BAC	

JOB NO.	FILE NO	REV.	DATE	REVISIONS	BY	CHKD.
		Rev3	08.6.07	"as built"	Frohn	Stippich
		Rev2	02.2.06		Frohn	Eichler

PROJECT NAME: ASU KOSICE

PLANT PART: BOOSTER AIR COMPRESSOR

AIR LIQUIDE

Air Liquide AGS GmbH
Fütingsweg 34
47805 Krefeld

DRAWING NAME: BOOSTER AIR COMPRESSOR (BAC) CHARGE PRESSURE BAC PIC16007

SIZE: A3

FUNKTION DIAGRAM

DRWG. NO.: K70101_092.dwg

PROJ. NO.: K70101

REPLACES: REPLACED BY: BASED:

DATE: 17.06.2005
AUTHOR: Frohn
CHECK: Eichler
STD.:

Rang.	Comment	Origin	Type	Signal-/TAG-No.	Path
	Discharge pressure BAC	Analog signal	E	P 16045	8
	Reset surge protect.	Software push button	1	US16045_RES	24
	Surge valve open	End position switch	1	GH 16074	40

Function

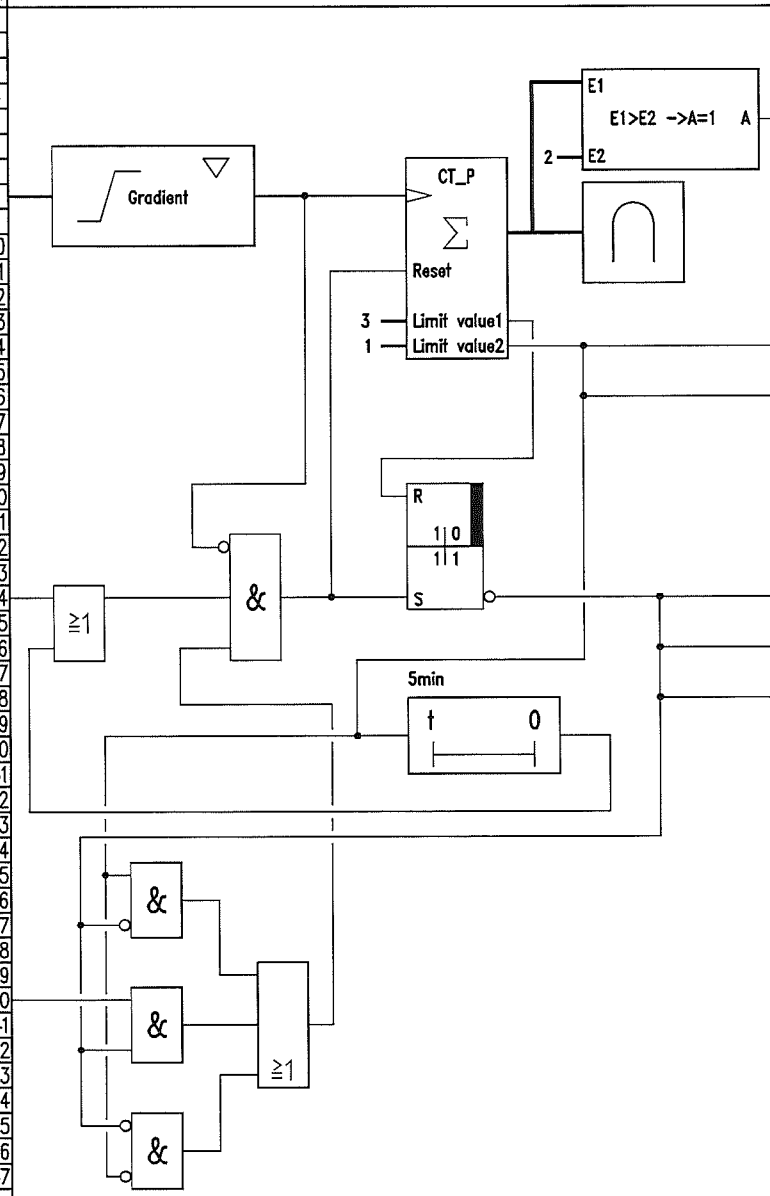

Path	Type	Signal/TAG-No.	Destination	Comment	Rang.
55	1	USHH 16045	to page no. 094/25	Surge protection	
64	1	UAH 16045	Alarm OS	"1 surge push"	
66	1	USH 16045	to page no. 094/25		
74	1	UAHH 16045	Alarm OS	"Surge protection"	
76	1	USHHH 16045	to page no. 083/29	Surge protection	
78	1	USHHH 16045	to page no. 90/11	US 16074	

JOB NO.	FILE NO.	REV.	DATE	REVISIONS	BY	CHKD.
		Rev3	08.6.07	"as built"	Frohn	Stippich
		Rev2	02.2.06		Frohn	Eichler

PROJECT NAME: ASU KOSICE

PLANT PART: BOOSTER AIR COMPRESSOR

AIR LIQUIDE

Air Liquide AGS GmbH
Fütingsweg 34
47805 Krefeld

DRAWING NAME: BOOSTER AIR COMPRESSOR (BAC)
ANTI SURGE PROTECTION U16045

SIZE A3 | FUNKTION DIAGRAM

DRWG. NO. K70101_093.dwg

PROJ. NO. K70101

REPLACES: | REPLACED BY: | BASED:

DATE 17.06.2005
AUTHOR Frohn
CHECK Eichler
STD.

Page no. 093
Of 230 Pages

Comment	Origin	Type	Signal-/TAG-No.	Path
Output signal FIC16074	0...100%	E	FYI 16074	14
+ 10%	Factor 0,1	E		21
Surge protection	from page no. 93/66	1	UH 16045	25
Air discharge contr.	from page no. 97/88	E	P16045_2	28

Function

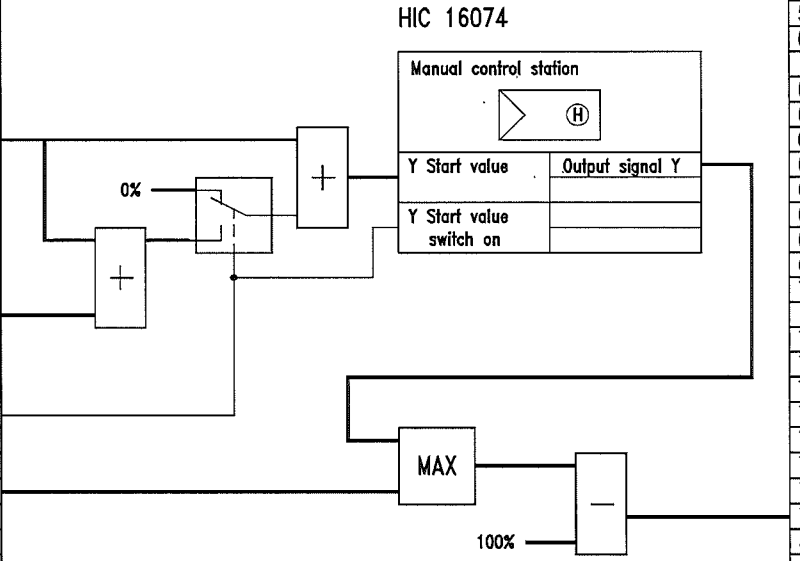

Path	Type	Signal/TAG-No.	Destination	Comment
79	E	HIC16074	to AC-controller	Manual output signal
80			FIC 16074	anti surge valve

Rev3	08.6.07	"as built"	Frohn	Stippich
Rev2	02.2.06		Frohn	Eichler
JOB NO.	FILE NO	REV.	DATE	REVISIONS	BY	CHKD.

PROJECT NAME: ASU KOSICE

PLANT PART: BOOSTER AIR COMPRESSOR

AIR LIQUIDE

Air Liquide AGS GmbH
Fütingsweg 34
47805 Krefeld

DRAWING NAME: BOOSTER AIR COMPRESSOR (BAC)
MANUAL OUTPUT SIGNAL ANTI SURGE
HIC 16074

SIZE: A3

FUNKTION DIAGRAM

DRWG. NO.: K70101_094.dwg

PROJ. NO.: K70101

REPLACES: REPLACED BY: BASED:

DATE: 17.06.2005
AUTHOR: Frohn
CHECK: Eichler
STD.:

Comment	Origin	Type	Signal-/TAG-No.	Path
Partial Trip BAC	from page no. 84/76	1	US 16000_2	2
Air discharge BAC	Analog value	E	P 16045	4
Charge press. BAC	Analog value	E	P 16007	10
Trip BAC	from page no. 82/65	1	US 16000	28

Function

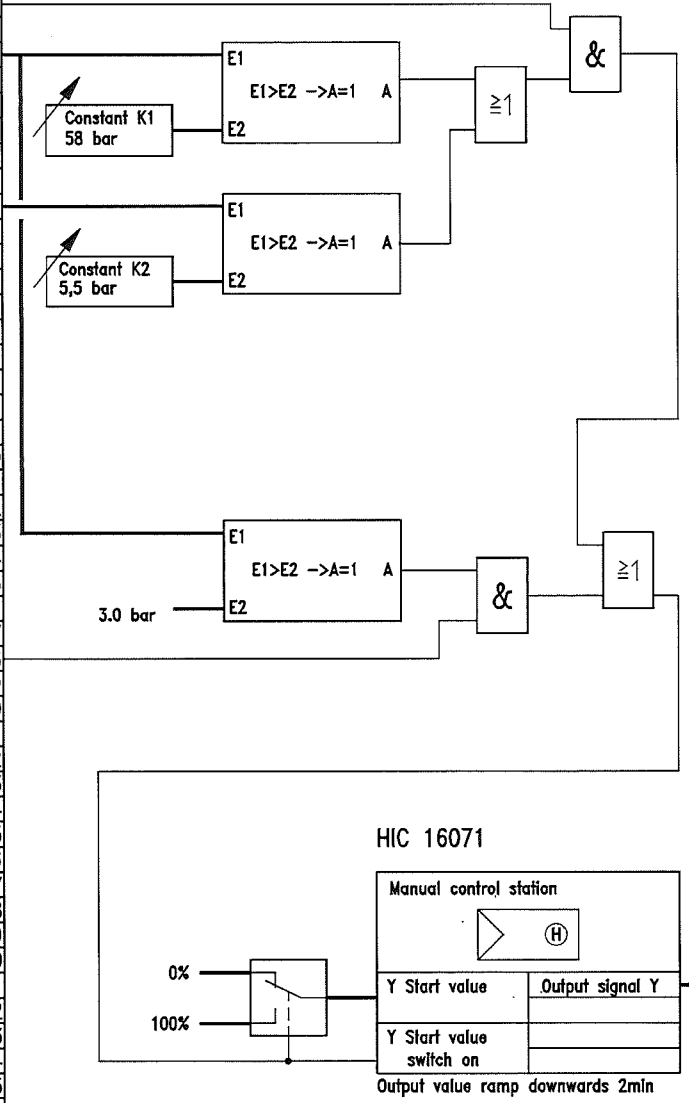

Path	Type	Signal/TAG-No.	Destination	Comment
91	1	HIC 16071	Positioner 20...4mA	Control valve
92			= 0-100%	HV16071
93				Blow off valve BAC

JOB NO.	FILE NO.	REV.	DATE	REVISIONS	BY	CHKD.
		Rev3	08.6.07	"as built"	Frohn	Stippich
		Rev2	02.2.06		Frohn	Eichler

PROJECT NAME: ASU KOSICE

PLANT PART: BOOSTER AIR COMPRESSOR

AIR LIQUIDE

Air Liquide AGS GmbH
Fütingsweg 34
47805 Krefeld

DRAWING NAME: BOOSTER AIR COMPRESSOR (BAC) BLOW OFF VALVE HIC 16071

SIZE: A3

FUNKTION DIAGRAM

DRWG. NO.: K70101_095.dwg

PROJ. NO.: K70101

REPLACES: REPLACED BY: BASED:

DATE: 17.06.2005
AUTHOR: Frohn
CHECK: Eichler
STD.:

Comment	Origin	Type	Signal-/TAG-No.	Path
				1
				2
				3
HK 16073 open	End position switch	1	GH 16073	4
				5
				6
HK 16073 closed	End position switch	1	GL 16073	7
				8
				9
				10
				11
				12
				13
				14
				15
				16
				17
				18
				19
				20
				21
				22
				23
				24
				25
				26
				27
				28
				29
				30
				31
				32
				33
				34
				35
Trip BAC	from page no. 82/63	1	US 16000	36
				37
				38
Partial trip BAC	from page no. 84/73	1	US 16000_2	39
				40
				41
				42
				43
				44
				45
				46
				47
				48

Function

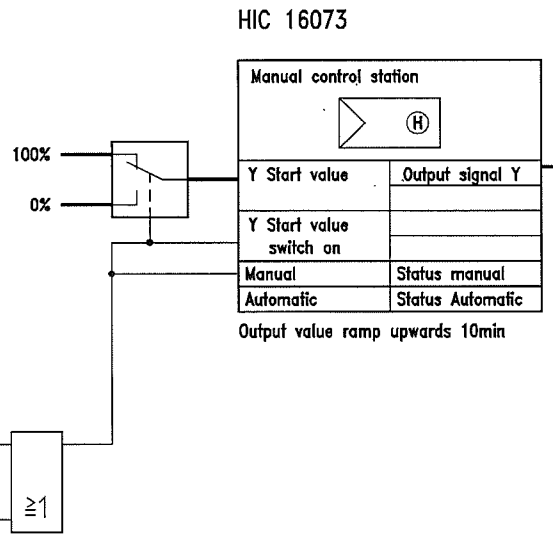

Path	Type	Signal/TAG-No.	Destination	Comment
51				
52				
53				
54	1	GOH 16073	OS	HK 16073 open
55				
56				
57	1	GOL 16073	OS	HK 16073 closed
58				
59				
60				
61				
62				
63				
64				
65				
66				
67				
68				
69				
70				
71				
72				
73				
74				
75	E	HK 16073	Positioner 4...20mA	Butterfly valve HK16073
76			= 0-100%	Air from booster
77				
78				
79				
80				
81				
82				
83				
84				
85				
86				
87				
88				
89				
90				
91				
92				
93				
94				
95				
96				
97				
98				

JOB NO.	FILE NO.	REV.	DATE	REVISIONS	BY	CHKD.
		Rev3	08.6.07	"as built"	Frohn	Stippich
		Rev2	02.2.06		Frohn	Eichler

PROJECT NAME: ASU KOSICE

PLANT PART: BOOSTER AIR COMPRESSOR

AIR LIQUIDE

Air Liquide AGS GmbH
Fütingsweg 34
47805 Krefeld

DRAWING NAME: BOOSTER AIR COMPRESSOR (BAC)
AIR FROM BOOSTER HIC 16073

SIZE: A3

FUNKTION DIAGRAM

DRWG. NO.: K70101_096.dwg

PROJ. NO.: K70101

REPLACES: REPLACED BY:

DATE: 17.06.2005
AUTHOR: Frohn
CHECK: Eichler
STD.:

Page no. 096
Of 230 Pages

BASED:

Comment	Origin	Type	Signal-/TAG-No.	Path
Air discarge BAC	P-Transmitter	E	PT 16045	10
Partial trip BAC	from page no. 84/70	1	US 16000_2_dyn	17
Trip BAC	from page no. 82/77	1	US 16000	19

Function

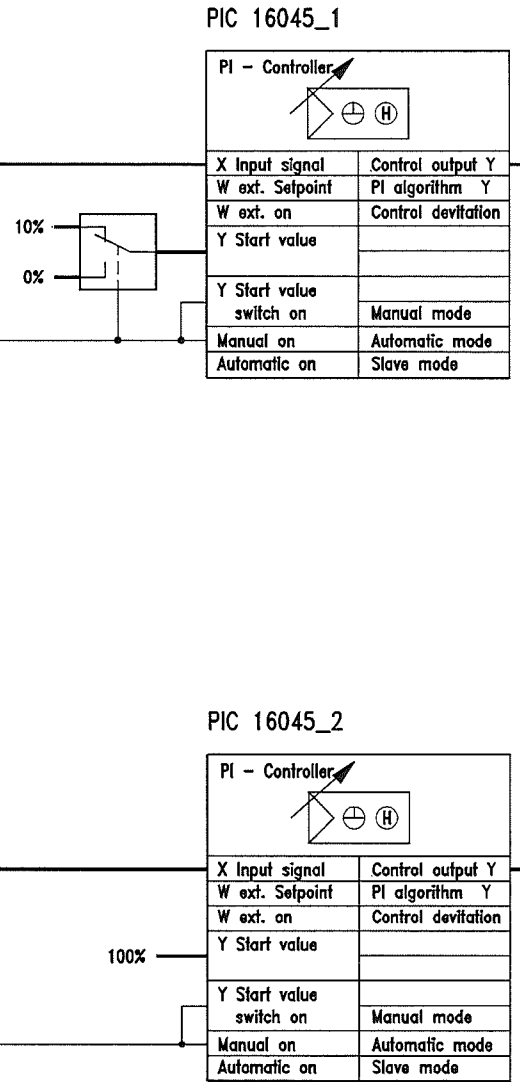

Path	Type	Signal/TAG-No.	Destination	Comment
60	E	UY 16010	Positioner 0-100% = 4-20 mA	Guide vane 1.stage
88	E	P16045_2_OUT	to page 94/28	HIC 16074

JOB NO.	FILE NO.	REV.	DATE	REVISIONS	BY	CHKD.
		Rev3	08.6.07	"as built"	Frohn	Stippich
		Rev2	02.2.06		Frohn	Eichler

PROJECT NAME: ASU KOSICE

PLANT PART: BOOSTER AIR COMPRESSOR

AIR LIQUIDE

Air Liquide AGS GmbH
Fütingsweg 34
47805 Krefeld

DRAWING NAME: BOOSTER AIR COMPRESSOR (BAC)
GUIDE VANE CONTROL PIC16045_1
AIR DISCHARGE SURGE CONTROLLER

SIZE: A3

FUNKTION DIAGRAM

DRWG. NO.: K70101_097.dwg

PROJ. NO.: K70101

REPLACES: REPLACED BY: BASED:

DATE: 17.06.2005
AUTHOR: Frohn
CHECK: Eichler
STD.:

Comment	Origin	Type	Signal-/TAG-No.	Path
UK 20026 open	End position switch	1	GH 20026	13
UK 20026 closed	End position switch	1	GL 20026	15
Trip cold box	from page no.100/76	1	US 20000	21
HP-column	Value > Max1	1	PH 21002	26
Air ex mol sieve	P-transmitter	1	PT 15035	28
HP-column	P-transmitter	1	PT 21002	31

Function

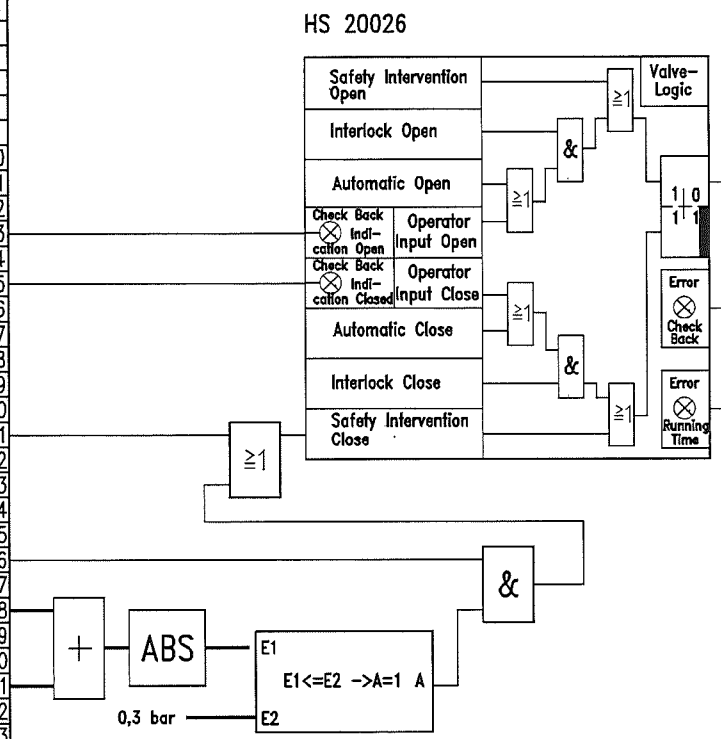

Path	Type	Signal/TAG-No.	Destination	Comment
61	1	HS 20026	Solenoid valve	Air to MHE
62				Butterfly valve
63				UK 20026
66	1	HS 20026_CB	Alarm OS	"Check back error"
70	1	HS 20026_RT	Alarm OS	"Running time error"

JOB NO.	FILE NO	REV.	DATE	REVISIONS	BY	CHKD.
		Rev3	08.6.07	"as built"	Frohn	Stippich
		Rev2	02.2.06		Frohn	Eichler

PROJECT NAME: ASU KOSICE

PLANT PART: COLD BOX

AIR LIQUIDE

Air Liquide AGS GmbH
Fütingsweg 34
47805 Krefeld

DRAWING NAME: COLD BOX

AIR TO MAIN HEAT EXCHANGER
HS 20026

SIZE: A3

FUNKTION DIAGRAM

DRWG. NO.: K70101_098.dwg

PROJ. NO.: K70101

REPLACES: REPLACED BY: BASED:

DATE: 17.06.2005
AUTHOR: Frohn
CHECK: Eichler
STD.:

Comment	Origin	Type	Signal-/TAG-No.	Path
Trip cold box	from page no.100/78	1	US 20000	24

Function

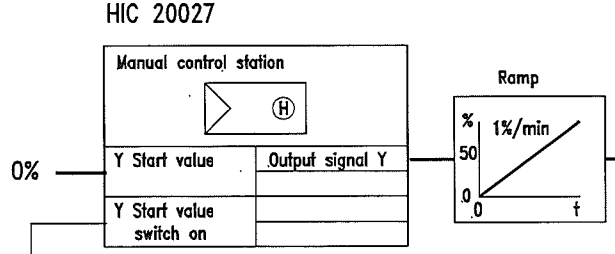

Path	Type	Signal/TAG-No.	Destination	Comment
60	E	H 20027	Positioner 0-100%	Air to MHE
61			= 4...20mA	Control butterfly valve
62				UK 20027

JOB NO.	FILE NO.	REV.	DATE	REVISIONS	BY	CHKD.
		Rev3	08.6.07	"as built"	Frohn	Stippich
		Rev2	02.2.06		Frohn	Eichler

PROJECT NAME: ASU KOSICE

PLANT PART: COLD BOX

AIR LIQUIDE

Air Liquide AGS GmbH
Fütingsweg 34
47805 Krefeld

DRAWING NAME: COLD BOX

AIR TO MAIN HEAT EXCHANGER
HIC 20027

SIZE: A3

FUNKTION DIAGRAM

DRWG. NO.: K70101_099.dwg

PROJ. NO.: K70101

REPLACES: REPLACED BY: BASED:

DATE: 17.06.2005
AUTHOR: Frohn
CHECK: Eichler
STD.:

Rang.	Comment	Origin	Type	Signal-/TAG-No.	Path
					1
					2
					3
					4
					5
	Reset trip cold box	Software button OS	1	HS 20000	6
					7
					8
					9
					10
					11
					12
					13
					14
					15
	Trip mol sieve	from sheet 21/78	1	US 15000	16
					17
	Air outlet mol sieve	Value > Max2	1	THH 15035	18
					19
	Air outlet mol sieve	Value < Min2	1	PLL 15035	20
					21
	Trip BAC	from page 82/67	1	US 16000_dyn	22
	Air outlet BAC	Value > Max2	1	THH 16045	23
					24
	Level Lp-column	Value > Max2	1	LHH 22001	25
					26
	Level Hp-column	Value > Max2	1	LHH 21003	27
	Level Lox boiler	Value > Max2	1	LHH 40007	28
					29
					30
					31
	ppm CnHm in LOX	Value > Max2	1	QHH 22011	32
					33
					34
	GOX from cold box	Y-Value > 99%	1	F20011_Y100	35
					36
	GOX from cold box	Value < Min2	1	FLL20011	37
					38
					39
	Partial trip cold box	from page no.103/76	1	US 20000_2	40
					41
					42
					43
					44
					45
					46
					47
					48

Function

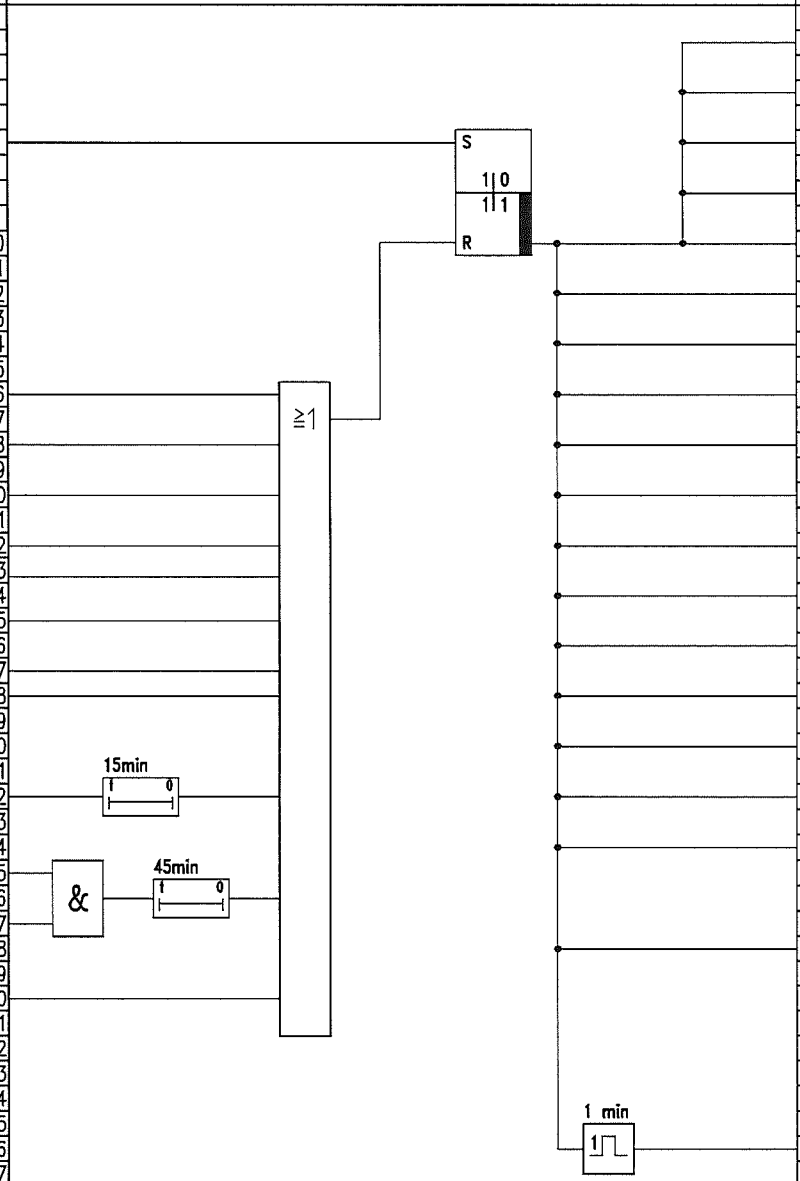

Path	Type	Signal/TAG-No.	Destination	Comment	Rang.
51					
52	1	UA 20000	Alarm OS	"Trip cold box"	
53					
54	1	US 20000	PIC 15041	UN2 to chiller	
55			Controller "Automatic"	WE = 500 mbar	
56	1	US 20000	to page no. 66/4	Heating off reg. gas	
57				US 15040	
58	1	US 20000	to page no. 125/4	Trip expander turbine	
59				US24100	
60	1	US 20000	to page no. 134/4	Trip expander turbine	
61				US24200	
62	1	US 20000	to page no. 106/15	Trip LP-GAN	
63				US20005	
64	1	US 20000	to page no. 104/15	Trip HP-GAN	
65				US20001	
66	1	US 20000	to page no. 105/15	Trip GOX	
67				US20011	
68	1	US 20000_TRC0	to page no. 108/20	GAN blow off FIC 20002	
69				Contr. Manual/Y=0%	
70	1	US 20000_TRC0	to page no. 110/20	GOX blow off FIC 20012	
71				Contr. Manual/Y=0%	
72	1	US 20000_TRC0	to page no. 112/20	LP GAN blow off FIC20006	
73				Contr. Manual/Y=0%	
74	1	US 20000	to page no.75/33	TIC15043	
75				manual / Y= 0%	
76	1	US 20000	to page no. 098/21	Close air to MHE	
77				HS 20026	
78	1	US 20000	to page no. 099/22	Pressurisat. air to MHE	
79				HIC 20027 Y=0%	
80	1	US 20000	to page no. 120/15	Trip LOX to storage	
81				US 22001	
82	1	US 20000	to page no. 121/15	Trip LIN to storage	
83				US 23013	
84	1	US 20000	to page no. 147/20	Trip pure Argon column	
85				US 43000	
86					
87					
88	1	US 20000	PIC 40003 on "Auto"	Crude Ar blow off	
89			switch to HK40012	WE = 300 mbar	
90					
91					
92					
93					
94					
95					
96	1	US20000_dyn	to page no. 101/3	Trip cold box one shot	
97					
98					

JOB NO.	FILE NO	REV.	DATE	REVISIONS	BY	CHKD.
		Rev3	08.6.07	"as built"	Frohn	Stippich
		Rev2	02.2.06		Frohn	Eichler

PROJECT NAME: ASU KOSICE

PLANT PART: COLD BOX

AIR LIQUIDE

Air Liquide AGS GmbH
Fütingsweg 34
47805 Krefeld

DRAWING NAME: COLD BOX TRIP US 20000

SIZE: A3

FUNKTION DIAGRAM

DRWG. NO.: K70101_100.dwg

PROJ. NO.: K70101

REPLACES: REPLACED BY: BASED:

DATE: 17.06.2005
AUTHOR: Frohn
CHECK: Eichler
STD.:

Comment	Origin	Type	Signal-/TAG-No.	Path
				1
				2
Trip cold box	from page no.100/96	1	US 20000_dyn	3
one shot				4
				5
				6
				7
				8
				9
				10
				11
				12
				13
				14
				15
				16
				17
				18
				19
				20
				21
				22
				23
				24
				25
				26
				27
				28
				29
				30
				31
				32
				33
				34
				35
				36
				37
				38
				39
				40
				41
				42
				43
				44
				45
				46
				47

Function

Path	Type	Signal/TAG-No.	Destination	Comment
51				
52				
53	1	US 20000_dyn	to page 73/35	FIC 15041
54				Contr. manual/Y=0%
55	1	US 20000_dyn	TIC 20008	Liquid air outlet MHE
56			Manual / Y=100%	
57	1	US 20000_dyn	FIC 23073	LIN product to dump
58			Manual / Y=0%	
59	1	US 20000_dyn	to page no.113/38	LOX product to dump
60			LIC 23076	Manual / Y=0%
61	1	US 20000_dyn	LIC 21003	Level sump Hp-column
62			Manual Y=0%	
63	1	US 20000_dyn	HIC 21006	LIN reflux HP-column
64			Y = 0%	
65	1	US 20000_dyn	HIC 21014	LAIR to HP-column
66			Y = 0%	
67	1	US 20000_dyn	to page no.117/34	WLIN to LP-column
68			FIC 22013	Manual / Y=0%
69	1	US 20000_dyn	to page no. 118/41	Control GOX
70			Manual / Y=0%	GOX FIC 22043
71	1	US 20000_dyn	HIC 73001 /Y=0%	LIN assist
72				
73	1	US 20000_dyn	LIC 21060	LAR
74			Manual / Y=0%	
75	1	US 20000_dyn	to page no.142/20	LAR-pump P40100
76	1	US 20000_dyn	to page no.145/41	HS 40100
77	1	US 20000_dyn	LIC 22002	LOX LGCC
78			Manual / Y=0%	
79	1	US 20000_dyn	to page no.151/14	LOX-pump P61100
80	1	US 20000_dyn	to page no.155/43	HS 61110
81				
82				
83	1	US 20000_dyn	to page no.158/14	LOX-pump P61200
84	1	US 20000_dyn	to page no.162/43	HS 61210
85				
86				
87	1	US 20000_dyn	to page no.165/14	LIN-pump P71100
88	1	US 20000_dyn	to page no.169/43	HS 71100
89				
90				
91	1	US 20000_dyn	to page no.172/14	LIN-pump P71200
92	1	US 20000_dyn	to page no.176/43	HS 71200
93				
94	1	US 20000_dyn	to page no.004/15	Partial trip MAC
95	1	US 20000_dyn	to page no.084/15	Partial trip BAC
96				
97	1	US 20000_dyn	to page no.102/3	Trip cold box one shot
98				

JOB NO.	FILE NO	REV.	DATE	REVISIONS	BY	CHKD.
		Rev3	08.6.07	"as built"	Frohn	Stippich
		Rev2	02.2.06		Frohn	Eichler

PROJECT NAME: ASU KOSICE

PLANT PART: COLD BOX

AIR LIQUIDE

Air Liquide AGS GmbH
Fütingsweg 34
47805 Krefeld

DRAWING NAME: COLD BOX
TRIP ONE SHOT US 20000_1

SIZE: A3

FUNKTION DIAGRAM

DRWG. NO.: K70101_101.dwg

PROJ. NO.: K70101

REPLACES:

REPLACED BY:

DATE: 17.06.2005
AUTHOR: Frohn
CHECK: Eichler
STD.:

BASED:

Comment	Origin	Type	Signal-/TAG-No.	Path
				1
				2
Trip cold box	from page no.101/97	1	US 20000_dyn	3
one shot				4
				5
				6
				7
				8
				9
				10
				11
				12
				13
				14
				15
				16
				17
				18
				19
				20
				21
				22
				23
				24
				25
				26
				27
				28
				29
				30
				31
				32
				33
				34
				35
				36
				37
				38
				39
				40
				41
				42
				43
				44
				45
				46
				47
				48

Function

Path	Type	Signal/TAG-No.	Destination	Comment
51				
52				
53	1	US 20000_dyn	HIC 40005	Not cond. CAr blow out
54			Y = 0%	
55	1	US 20000_dyn	LIC 40007	CR-LOX from CAr cond.
56			Manual / Y = 0%	UY 40007
57	1	US 20000_dyn	FIC 40014	LAR to pure Ar-column
58			Manual / Y = 0%	
59	1	US 20000_dyn	off	Box purge off
60				HS 87017
61				
62				
63	1	US 20000_dyn	to page no. 204/9	Partial trip NC1
64				
65	1	US 20000_dyn	to page no. 218/9	Partial trip NC2
66				
67	1	US 20000_dyn	PIC 40003	(PK 40008)
68			Manual / Y=100%	
69	1	US 20000_dyn	FIC 40011	
70			Manual / Y = 0%	
71				
72				
73				
74				
75				
76				
77				
78				
79				
80				
81				
82				
83				
84				
85				
86				
87				
88				
89				
90				
91				
92				
93				
94				
95				
96				
97				
98				

JOB NO.	FILE NO.	REV.	DATE	REVISIONS	BY	CHKD.
		Rev3	08.6.07	"as built"	Frohn	Stippich
		Rev2	02.2.06		Frohn	Eichler

PROJECT NAME: ASU KOSICE

PLANT PART: COLD BOX

AIR LIQUIDE

Air Liquide AGS GmbH
Fütingsweg 34
47805 Krefeld

DRAWING NAME: COLD BOX
TRIP ONE SHOT US 20000_1

SIZE: A3

FUNKTION DIAGRAM

DRWG. NO.: K70101_102.dwg

PROJ. NO.: K70101

REPLACES: REPLACED BY: BASED:

DATE: 17.06.2005
AUTHOR: Frohn
CHECK: Eichler
STD.:

Comment	Origin	Type	Signal-/TAG-No.	Path
Reset trip cold box	Software reset button	1	HS 20000	11
LOX-Level LP-column	Value < Min2	1	LLL 22001	17
GOX product open	Y-value > 1%	1	FIC 20011	23
GOX blow off	Y-value > 1%	1	FIC 20012	25
LOX product open	Y-value > 1%	1	UY 22001	27
Partial trip cold box		1	HS20000_2	30
Crude-Ar condenser	Value < Min2	1	LLL 40007	36
LP-column sump	Value < Min2	1	LLL 20011	41
CAr columne sump	Value < Min2	1	LLL 40017	46

Function

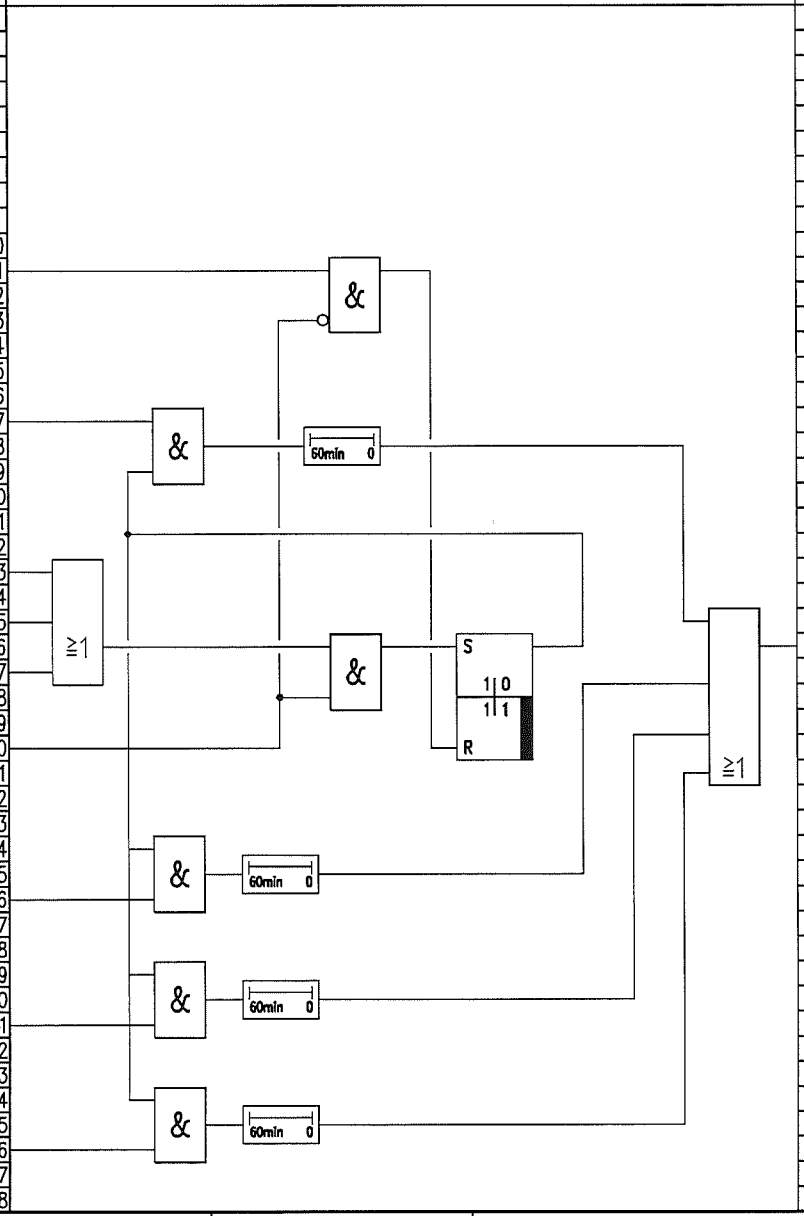

Path	Type	Signal/TAG-No.	Destination	Comment
76	1	US 20000_2	to page no.100/40	Partial trip cold box

JOB NO.	FILE NO	REV.	DATE	REVISIONS	BY	CHKD.
		Rev3	08.6.07	"as built"	Frohn	Stippich
		Rev2	02.2.06		Frohn	Eichler

PROJECT NAME: ASU KOSICE

PLANT PART: COLD BOX

AIR LIQUIDE

Air Liquide AGS GmbH
Fütingsweg 34
47805 Krefeld

DRAWING NAME: COLD BOX US 20000.2

SIZE: A3

FUNKTION DIAGRAM

DRWG. NO.: K70101_103.dwg

PROJ. NO.: K70101

REPLACES: REPLACED BY: BASED:

DATE: 17.06.2005
AUTHOR: Frohn
CHECK: Eichler
STD.:

Page no. 103
Of 230 Pages

Rang.	Comment	Origin	Type	Signal-/TAG-No.	Path
					1
					2
					3
					4
					5
	Reset trip GAN	Software button OS	1	HS 20001	6
					7
					8
					9
					10
					11
					12
					13
					14
	Trip cold box	from page no.100/64	1	US 20000	15
					16
					17
					18
					19
	GAN outlet coldbox	Value > Max2	1	QHH 20001	20
	ppm02 analyzer				21
					22
					23
	Trip LIN-pump	frpm page no.165/68	1	US 71100	24
	P71100				25
	Trip LIN-pump	frpm page no.172/68	1	US 71200	26
	P71200				27
					28
					29
					30
					31
					32
					33
					34
	GAN product	Value < Min2	1	TLL 20001	35
					36
	GAN outlet coldbox	Value < Min2	1	TLL 20025	37
					38
	GAN outlet coldbox	Value < Min2	1	TLL 20026	39
					40
	Trip cold trap GAN	Shut down relay	0	UA 20025	41
					42
					43
					44
					45
					46
					47
					48

Function

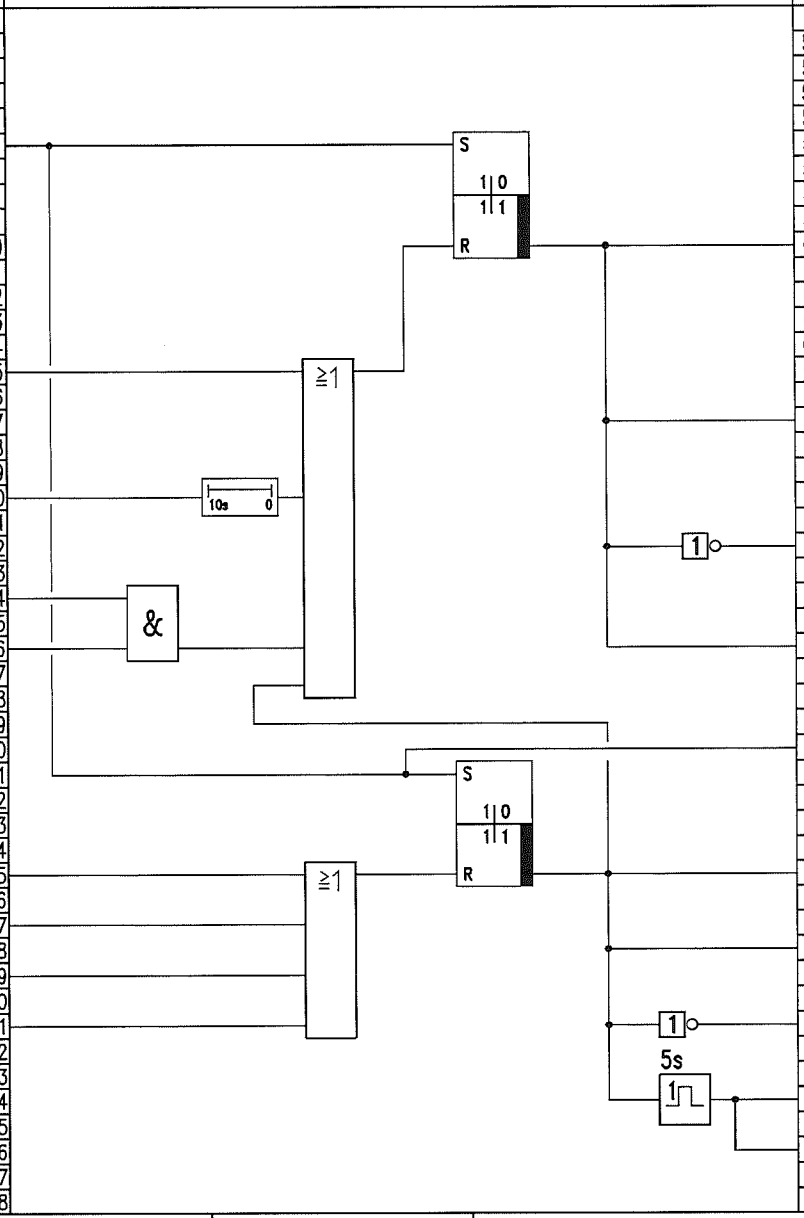

Path	Type	Signal/TAG-No.	Destination	Comment	Rang.
51					
52					
53					
54					
55					
56					
57					
58					
59					
60	1	UA 20001	Alarm OS	"Trip HP-GAN product"	
61					
62					
63					
64					
65					
66					
67	1	US 20001	to page 107/25	HP-GAN from coldbox	
68				FIC 20001	
69				manual / Y=0%	
70					
71					
72	0	US 20001	Close solenoid valve	HP-GAN product	
73			UV 20001	Close FV 20001	
74					
75					
76	1	US 20001	to page no. 108/25	HP-GAN blow off	
77				FIC 20002 on	
78				"Automatic"	
79					
80	1	HS 20001	Contact	Reset ESD-relay	
81					
82					
83					
84					
85	1	UA 20025	Alarm OS	HP-GAN temp. trip	
86					
87					
88	1	US 20025	To page no. 108/22	HP-GAN blow off	
89				FIC 20002	
90				manual / Y=0%	
91	0	US 20025	Solenoid valve	Close UV20002	
92					
93					
94	1	US 20025_dyn	to page 165/20	Shutt off P7100	
95					
96	1	US 20025_dyn	to page 172/20	Shut off P71200	
97					
98					

JOB NO.	FILE NO.	REV.	DATE	REVISIONS	BY	CHKD.
		Rev3	08.6.07	"as built"	Frohn	Stippich
		Rev2	02.2.06		Frohn	Eichler

PROJECT NAME: ASU KOSICE

PLANT PART: COLD BOX

AIR LIQUIDE

Air Liquide AGS GmbH
Fütingsweg 34
47805 Krefeld

DRAWING NAME: COLD BOX

TRIP HP-GAN PURITY US20001
GAN TEMPERATURE TRIP UZ20025

SIZE: A3

FUNKTION DIAGRAM

DRWG. NO.: K70101_104.deg

PROJ. NO.: K70101

REPLACES: REPLACED BY: BASED:

DATE: 17.06.2005
AUTHOR: Frohn
CHECK: Eichler
STD.:

Rang.	Comment	Origin	Type	Signal-/TAG-No.	Path
					1
					2
					3
					4
					5
	Reset trip GOX	Software button OS	1	HS 20011	6
					7
					8
					9
					10
					11
					12
					13
					14
	Trip cold box	from page no.100/66	1	US 20000	15
					16
					17
					18
					19
	GOX outlet coldbox	Value < Min2	1	QLL 20011	20
	%O2 analyzer				21
					22
					23
	Trip LOX-pump	from page no.151/68	1	US 61100	24
	P61100				25
	Trip LOX-pump	from page no.158/68	1	US 61200	26
	P61200				27
					28
					29
					30
					31
					32
					33
					34
	GOX product	Value < Min2	1	TLL 20011	35
					36
	GOX outlet coldbox	Value < Min2	1	TLL 20028	37
					38
	GOX outlet coldbox	Value < Min2	1	TLL 20027	39
					40
	Trip cold trap GOX	Shut down relay	1	UA 20027	41
					42
					43
					44
					45
					46
					47

Function

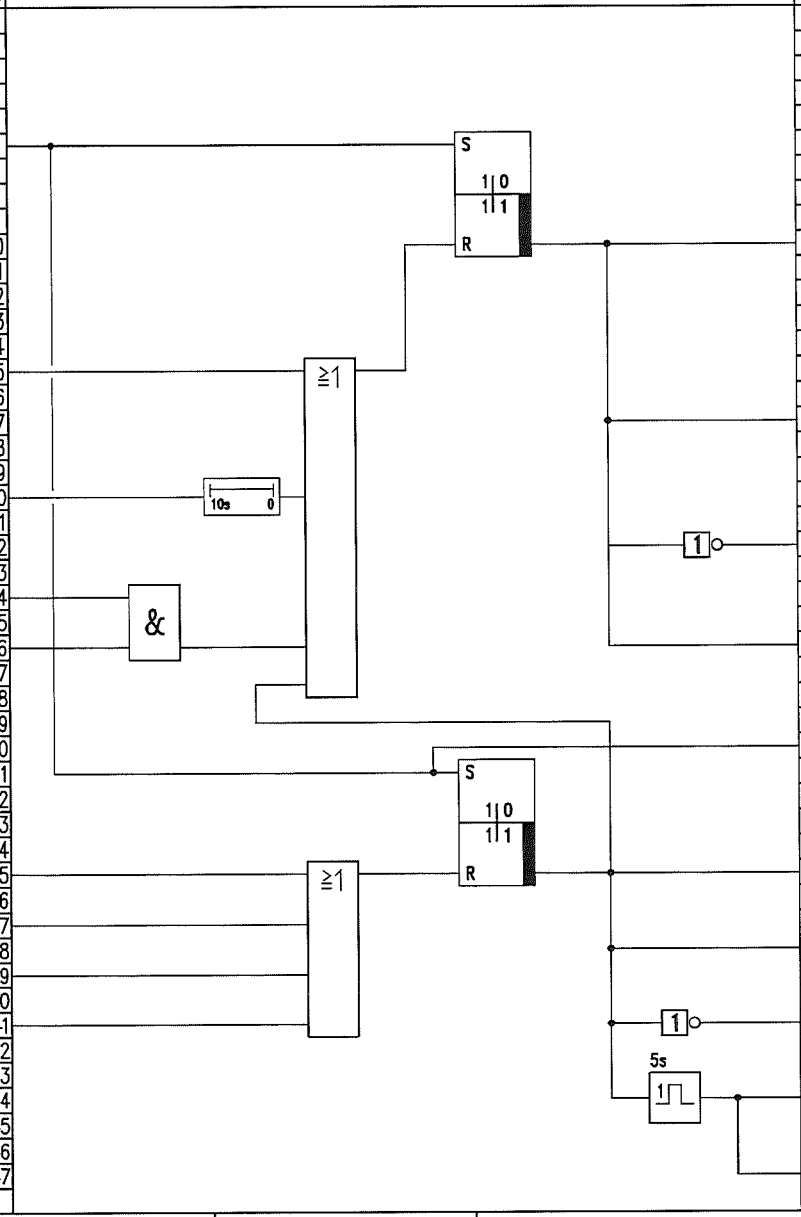

Path	Type	Signal/TAG-No.	Destination	Comment	Rang.
51					
52					
53					
54					
55					
56					
57					
58					
59					
60	1	UA 20011	Alarm OS	"Trip GOX product"	
61					
62					
63					
64					
65					
66					
67	1	US 20011	to page no. 109/25	GOX from coldbox	
68				FIC 20011	
69				manual / Y=0%	
70					
71					
72	0	US 20011	Close solenoid valve	GOX product	
73			UV 20011	Close FCV 20011	
74					
75					
76	1	US 20011	to page no. 110/25	GOX blow out	
77				FIC 20012 on	
78				automatic	
79					
80	1	HS 20011	Contact	Reset ESD-relay	
81				UZ 20027	
82					
83					
84					
85	1	UA 20027	Alarm OS	GOX tempreature trip	
86					
87					
88	1	US 20027	to page no. 110/22	GOX blow out	
89				FIC 20012	
90				manual / Y=0%	
91	0	US 20027	Solenoid valve	Close UV20012	
92					
93					
94	1	US 20027_dyn	to page no. 151/20	Shut off P61100	
95					
96					
97	1	US 20027_dyn	to page no. 158/20	Shut off P61200	
98					

JOB NO.	FILE NO.	REV.	DATE	REVISIONS	BY	CHKD.
		Rev3	08.6.07	"as built"	Frohn	Slippich
		Rev2	02.2.06		Frohn	Eichler

PROJECT NAME: ASU KOSICE

PLANT PART: COLD BOX

AIR LIQUIDE

Air Liquide AGS GmbH
Fütingsweg 34
47805 Krefeld

DRAWING NAME: COLD BOX

TRIP GOX PURITY US20011
GOX TEMPERATURE TRIP UZ20027

SIZE: A3

FUNKTION DIAGRAM

DRWG. NO.: K70101_105.dwg

PROJ. NO.: K70101

REPLACES: REPLACED BY: BASED:

DATE: 17.06.2005
AUTHOR: Frohn
CHECK: Eichler
STD.:

Rang.	Comment	Origin	Type	Signal-/TAG-No.	Path
					1
					2
					3
					4
					5
	Reset trip GAN	Software button OS	1	HS 20005	6
					7
					8
					9
					10
					11
					12
					13
					14
	Trip cold box	from page no.100/62	1	US 20000	15
					16
					17
					18
					19
	LP-GAN outlet CB	Value > Max2	1	QHH 20005	20
	ppmO2 analyzer				21
					22
					23
					24
					25
					26
					27
					28
					29
					30
					31
					32
					33
					34
					35
					36
					37
					38
					39
					40
					41
					42
					43
					44
					45
					46
					47
					48

Function

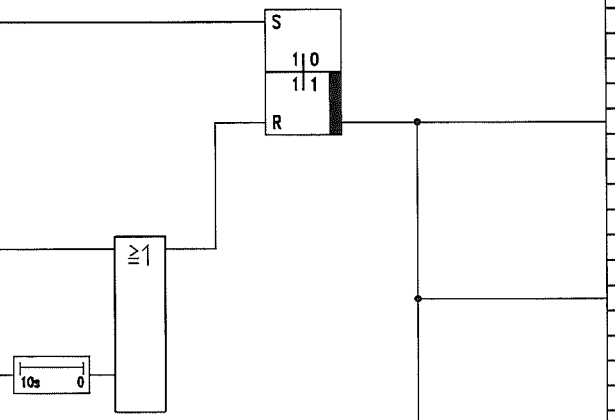

Path	Type	Signal/TAG-No.	Destination	Comment	Rang.
51					
52					
53					
54					
55					
56					
57					
58					
59					
60	1	UA 20005	Alarm OS	"Trip LP-GAN product"	
61					
62					
63					
64					
65					
66					
67	1	US 20005	to page 111/25	LP-GAN from coldbox	
68				FIC 20005	
69				manual / Y=0%	
70					
71					
72					
73					
74					
75					
76	1	US 20005	to page no. 112/25	LP-GAN blow off	
77				FIC 20006 on	
78				"Automatic"	
79					
80					
81					
82					
83					
84					
85					
86					
87					
88					
89					
90					
91					
92					
93					
94					
95					
96					
97					
98					

JOB NO.	FILE NO.	REV.	DATE	REVISIONS	BY	CHKD.
		Rev3	08.6.07	"as built"	Frohn	Stippich
		Rev2	02.2.06		Frohn	Eichler

PROJECT NAME: ASU KOSICE

PLANT PART: COLD BOX

AIR LIQUIDE

Air Liquide AGS GmbH
Fütingsweg 34
47805 Krefeld

DRAWING NAME: COLD BOX
TRIP LP-GAN PURITY US20005

SIZE: A3

FUNKTION DIAGRAM

DRWG. NO.: K70101_106.deg

PROJ. NO.: K70101

REPLACES: REPLACED BY: BASED:

DATE: 17.06.2005
AUTHOR: Frohn
CHECK: Eichler
STD.:

Comment	Origin	Type	Signal-/TAG-No.	Path
				1
				2
				3
HP-GAN outlet coldbox	DP-transmitter	E	FT 20001	4
				5
HP-GAN outlet coldbox	P-transmitter	E	PT 20001	6
				7
HP-AN outlet coldbox	Pt100	E	TE 20001	8
				9
				10
				11
				12
				13
				14
				15
				16
				17
				18
	Bias	E		19
				20
				21
				22
				23
				24
Trip GAN product	from page 104/67	1	US 20001	25
				26
				27
				28
				29
				30
				31
				32
				33
				34
				35
				36
				37
				38
				39
				40
				41
				42
				43
				44
				45
				46
				47
				48

Function

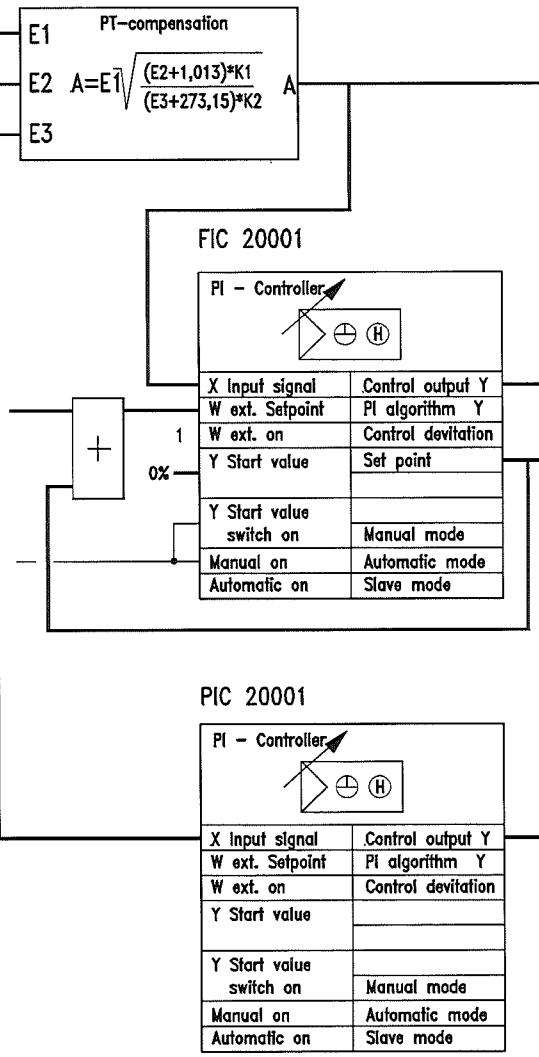

Path	Type	Signal/TAG-No.	Destination	Comment
51				
52				
53				
54				
55				
56	E	F 20001	Flow Pt corrected	HP-GAN outlet coldbox
57				
58				
59				
60				
61				
62				
63				
64				
65				
66				
67				
68	E	FCV 20001	Positioner 4...20mA	HP-GAN to Customer
69			= 0-100%	
70				
71	E	F20001_ASP	to page no.108/15	
72				
73				
74				
75				
76				
77				
78				
79				
80				
81				
82				
83				
84				
85				
86	E	PIC20001_Y	to page no. 170/10	Set point PIC 71170
87				
88				
89				
90	E	PIC20001_Y	to page no. 177/10	Set point PIC 71270
91				
92				
93				
94				
95				
96				
97				
98				

JOB NO.	FILE NO	REV.	DATE	REVISIONS	BY	CHKD.
		Rev3	08.6.07	"as built"	Frohn	Stippich
		Rev2	02.2.06		Frohn	Eichler

PROJECT NAME: ASU KOSICE

PLANT PART: COLD BOX

AIR LIQUIDE

Air Liquide AGS GmbH
Fütingsweg 34
47805 Krefeld

DRAWING NAME: COLD BOX

HP-GAN PROD. CONTROL FIC20001
PIC 20001

SIZE: A3

FUNKTION DIAGRAM

DRWG. NO.: K70101_107.dwg

PROJ. NO.: K70101

REPLACES: REPLACED BY: BASED:

DATE: 17.06.2005
AUTHOR: Frohn
CHECK: Eichler
STD.:

Rang.	Comment	Origin	Type	Signal-/TAG-No.	Path
	GAN ex cold box	Flow PT-corrected	E	F 20001	14
		from page no.107/71	E	F20001_ASP	15
	Trip cold box	from page no.100/68	1	US20000_TRC0	20
	Track Y=0%				21
	GAN temperature trip	from page no.104/88	1	US 20025	22
	Trip GAN product	from page 104/76	1	US 20001	25

Function

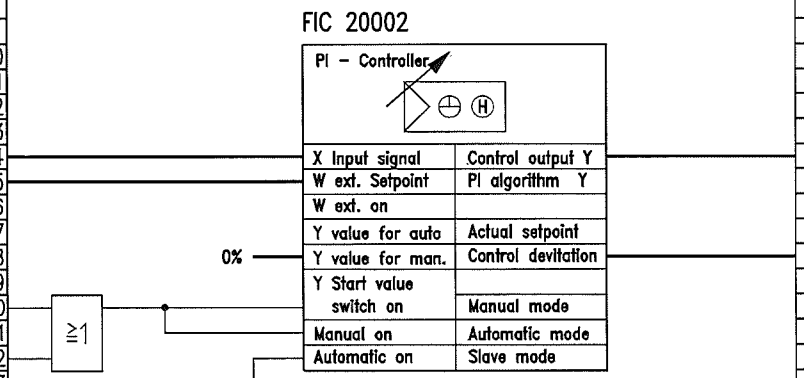

Path	Type	Signal/TAG-No.	Destination	Comment	Rang.
64	E	FV 20002	Positioner 0-100%	GAN blow off valve	
65			=4-20mA	FCV 20002	
68	E	F 20002_XD		Control devitation	

		Rev3	08.6.07	"as built"	Frohn	Stippich
		Rev2	02.2.06		Frohn	Eichler
JOB NO.	FILE NO.	REV.	DATE	REVISIONS	BY	CHKD.

PROJECT NAME: ASU KOSICE

PLANT PART: COLD BOX

AIR LIQUIDE

Air Liquide AGS GmbH
Fütingsweg 34
47805 Krefeld

DRAWING NAME: COLD BOX
GAN BLOW OFF CONTROL
FIC 20002

SIZE: A3

FUNKTION DIAGRAM

DRWG. NO.: K70101_108.dwg

PROJ. NO.: K70101

REPLACES: REPLACED BY:

DATE: 17.06.2005
AUTHOR: Frohn
CHECK: Eichler
STD.:

BASED:

Comment	Origin	Type	Signal-/TAG-No.	Path
GOX outlet coldbox	DP-transmitter	E	FT 20011	4
GOX outlet coldbox	P-transmitter	E	PT 20011	6
GOX outlet coldbox	Pt100	E	TE 20011	8
	Bias	E		19
Trip GOX product	from page 105/67	1	US 20011	25

Function

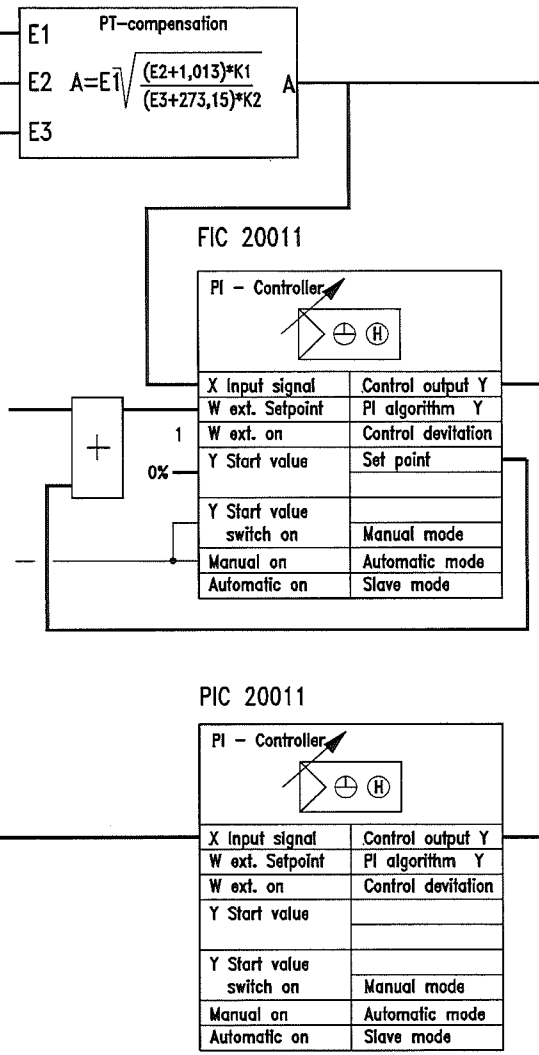

Path	Type	Signal/TAG-No.	Destination	Comment
56	E	F 20011	to page no. 110/14	GOX outlet coldbox Flow Pt corrected
68	E	FV 20011	Positioner 4...20mA = 0-100%	GOX to Customer
86	E	PIC20011_Y	to page no. 156/10	Set point PIC 61170
90	E	PIC20011_Y	to page no. 163/10	Set point PIC 61270

JOB NO.	FILE NO	REV.	DATE	REVISIONS	BY	CHKD.
		Rev3	08.6.07	"as built"	Frohn	Stippich
		Rev2	02.2.06		Frohn	Eichler

PROJECT NAME: ASU KOSICE

PLANT PART: COLD BOX

AIR LIQUIDE

Air Liquide AGS GmbH
Fütingsweg 34
47805 Krefeld

DRAWING NAME: COLD BOX
GOX PRODUCT CONTROL FIC 20011
PIC 20011

SIZE: A3

FUNKTION DIAGRAM

DRWG. NO.: K70101_109.dwg

PROJ. NO.: K70101

REPLACES: REPLACED BY:

DATE: 17.06.2005
AUTHOR: Frohn
CHECK: Eichler
STD.:

BASED:

Rang.	Comment	Origin	Type	Signal-/TAG-No.	Path
	GOX ex cold box	from page no.109/56	E	F 20011	14
	Flow PT-corrected				15
	Trip cold box	from page no.100/72	1	US20000_TRC0	20
	Track Y=0%				21
	GOX temperature trip	from page no.105/88	1	US 20027_dyn	22
	Trip GOX product	from page no.105/76	1	US 20011	25

Function

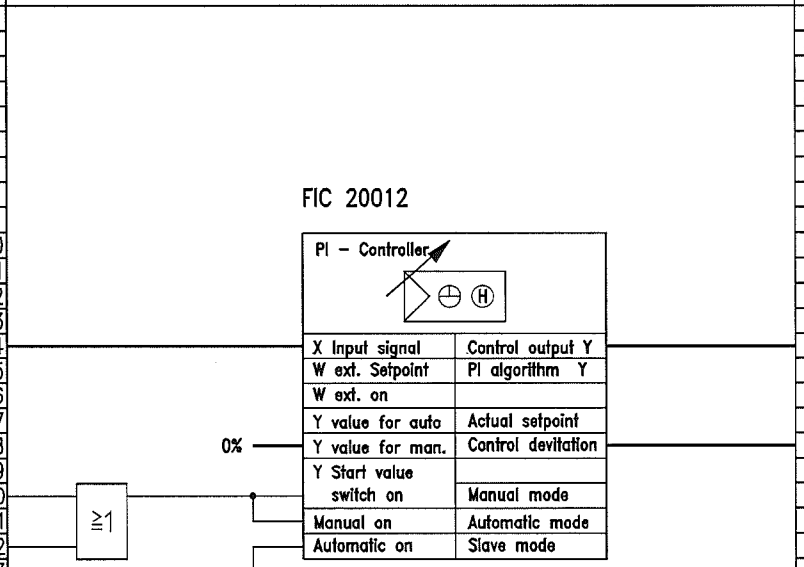

Path	Type	Signal/TAG-No.	Destination	Comment	Rang.
64	E	FV 20012	Positioner 0-100%	GOX blow off valve	
65			=4-20mA	FV 20012	
68	E	F 20012_XD		Control devitation	

Rev3	08.6.07	"as built"	Frohn	Slippich	
Rev2	02.2.06		Frohn	Eichler	
JOB NO.	FILE NO.	REV.	DATE	REVISIONS	BY / CHKD.

PROJECT NAME: ASU KOSICE

PLANT PART: COLD BOX

AIR LIQUIDE

Air Liquide AGS GmbH
Fütingsweg 34
47805 Krefeld

DRAWING NAME: COLD BOX
GOX BLOW OFF CONTROL
FIC 20012

SIZE: A3

FUNKTION DIAGRAM

DRWG. NO.: K701010_110.dwg

PROJ. NO.: K70101

REPLACES: REPLACED BY: BASED:

DATE: 17.06.2005
AUTHOR: Frohn
CHECK: Eichler
STD.:

Comment	Origin	Type	Signal-/TAG-No.	Path
				1
				2
				3
LP-GAN outlet coldbox	DP-transmitter	E	FT 20005	4
				5
LP-GAN outlet coldbox	P-transmitter	E	PT 20005	6
				7
LP-AN outlet coldbox	Pt100	E	TE 20005	8
				9
				10
				11
				12
				13
				14
				15
				16
				17
				18
				19
				20
				21
				22
				23
				24
Trip LP-GAN product	from page 106/67	1	US 20005	25
				26
				27
				28
				29
				30
				31
				32
				33
				34
				35
				36
				37
				38
				39
				40
				41
				42
				43
				44
				45
				46
				47
				48

Function

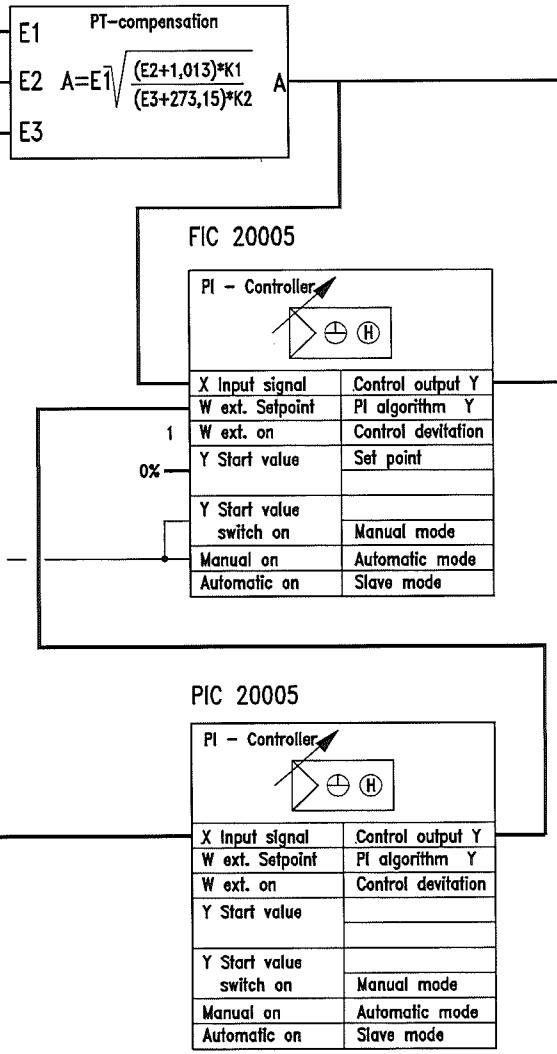

Path	Type	Signal/TAG-No.	Destination	Comment
51				
52				
53				
54				
55				
56	E	F 20005	Flow Pt corrected	LP-GAN outlet coldbox
57				
58				
59				
60				
61				
62				
63				
64				
65				
66				
67				
68	E	FK 20005	Positioner 4...20mA	LP-GAN to Compr.
69			= 0-100%	
70				
71				
72				
73				
74				
75				
76				
77				
78				
79				
80				
81				
82				
83				
84				
85				
86				
87				
88				
89				
90				
91				
92				
93				
94				
95				
96				
97				
98				

JOB NO.	FILE NO	REV.	DATE	REVISIONS	BY	CHKD.
		Rev3	08.6.07	"as built"	Frohn	Stippich
		Rev2	02.2.06		Frohn	Eichler

PROJECT NAME: ASU KOSICE

PLANT PART: COLD BOX

AIR LIQUIDE

Air Liquide AGS GmbH
Fütingsweg 34
47805 Krefeld

DRAWING NAME: COLD BOX

LP-GAN PROD. CONTROL FIC20005
PIC 20005

SIZE: A3

FUNKTION DIAGRAM

DRWG. NO.: K70101_111.dwg

PROJ. NO.: K70101

REPLACES: REPLACED BY: BASED:

DATE: 17.06.2005
AUTHOR: Frohn
CHECK: Eichler
STD.:

Rang.	Comment	Origin	Type	Signal-/TAG-No.	Path
	GAN ex cold box	Flow PT-corrected	E	F 20005	14
	Trip cold box	from page no.100/72	1	US20000_TRCO	20
	Track Y=0%				21
	Trip LP-GAN product	from page 106/76	1	US 20005	25

Function

FIC 20006

PI - Controller

X Input signal	Control output Y
W ext. Setpoint	PI algorithm Y
W ext. on	
Y value for auto	Actual setpoint
Y value for man.	Control devitation
Y Start value switch on	
Manual on	Manual mode
Automatic on	Automatic mode
	Slave mode

0%

Path	Type	Signal/TAG-No.	Destination	Comment	Rang.
64	E	FK 20006	Positioner 0-100%	LP-GAN blow off	
65			=4-20mA	FK 20006	
68	E	F 20006_XD		Control devitation	

		Rev3	08.6.07	"as built"	Frohn	Stippich
		Rev2	02.2.06		Frohn	Eichler
JOB NO.	FILE NO.	REV.	DATE	REVISIONS	BY	CHKD.

PROJECT NAME: ASU KOSICE

PLANT PART: COLD BOX

AIR LIQUIDE

Air Liquide AGS GmbH
Fütingsweg 34
47805 Krefeld

DRAWING NAME: COLD BOX

LP-GAN BLOW OFF CONTROL
FIC 20006

SIZE: A3

FUNKTION DIAGRAM

DRWG. NO.: K70101_112.dwg

PROJ. NO.: K70101

REPLACES: REPLACED BY: BASED:

DATE: 17.06.2005
AUTHOR: Frohn
CHECK: Eichler
STD.:

Comment	Origin	Type	Signal-/TAG-No.	Path
				1
				2
				3
HP-GAN to customer	DP-transmitter	E	FT 20003	4
				5
HP-GAN to customer	P-transmitter	E	PT 20003	6
				7
HP-GAN to customer	Pt100	E	TE 20003	8
				9
				10
				11
				12
				13
				14
				15
				16
				17
				18
				19
				20
				21
				22
				23
				24
				25
				26
				27
				28
				29
				30
				31
				32
				33
				34
				35
				36
				37
				38
				39
				40
				41
				42
				43
				44
				45
				46
				47
				48

Function

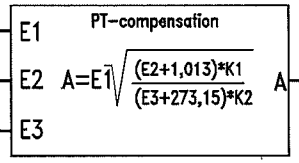

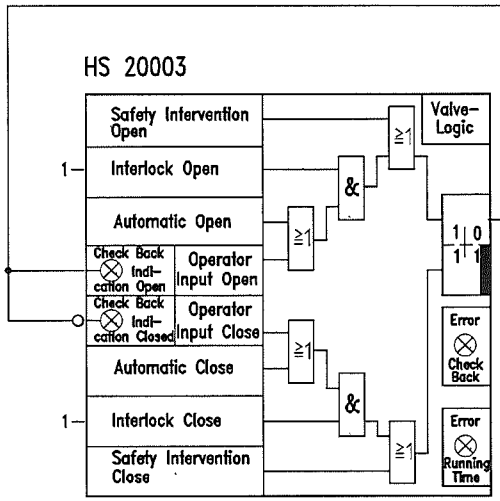

Path	Type	Signal/TAG-No.	Destination	Comment
51				
52				
53				
54				
55				
56	E	F 20003	Flow Pt corrected	HP-GAN to customer
57				
58				
59				
60				
61				
62				
63				
64				
65				
66				
67				
68				
69				
70				
71				
72				
73				
74				
75				
76				
77				
78	1	HS 20003	Solenoid valve	Open prodct valve
79				HV20003
80				HP-GAN to customer
81				
82				
83				
84				
85				
86				
87				
88				
89				
90				
91				
92				
93				
94				
95				
96				
97				
98				

JOB NO.	FILE NO	REV	DATE	REVISIONS	BY	CHKD.
		Rev3	08.6.07	"as built"	Frohn	Stippich
		Rev2	02.2.06		Frohn	Eichler

PROJECT NAME: ASU KOSICE

PLANT PART: COLD BOX

AIR LIQUIDE

Air Liquide AGS GmbH
Fütingsweg 34
47805 Krefeld

DRAWING NAME:
COLD BOX
HP-GAN PROD. TO CUSTOMER
FI20003 / HS20003

SIZE: A3

FUNKTION DIAGRAM

DRWG. NO.: K70101_113.dwg

PROJ. NO.: K70101

REPLACES: REPLACED BY: BASED:

DATE: 17.06.2005
AUTHOR: Frohn
CHECK: Eichler
STD.:

Comment	Origin	Type	Signal-/TAG-No.	Path
				1
				2
				3
HP-GOX to customer	DP-transmitter	E	FT 20013	4
				5
HP-GOX to customer	P-transmitter	E	PT 20013	6
				7
HP-GOX to customer	Pt100	E	TE 20013	8
				9
				10
				11
				12
				13
				14
				15
				16
				17
				18
				19
				20
				21
				22
				23
				24
				25
				26
				27
				28
				29
				30
				31
Differrence press.	Value < Min	1	PDL20013	32
				33
Differrence press.	Value < Min	1	DPL20015	34
				35
				36
				37
				38
				39
				40
				41
				42
				43
				44
				45
				46
				47
				48

Function

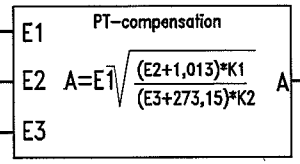

HIC 20013

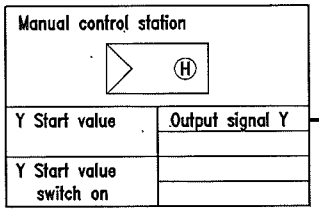

US 20013

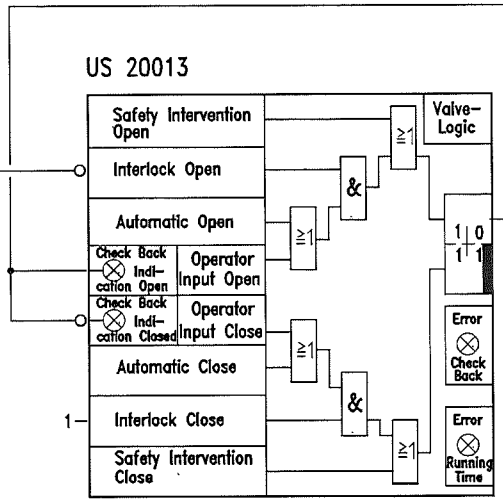

Path	Type	Signal/TAG-No.	Destination	Comment
51				
52				
53				
54				
55				
56	E	F 20013	Flow Pt corrected	HP-GOX to customer
57				
58				
59				
60				
61				
62				
63				
64				
65				
66				
67				
68				
69				
70				
71	E	H20013	Positioner 0-100%	Bypass valve
72			= 4...20mA	HV200013
73				
74				
75				
76				
77				
78				
79				
80				
81				
82				
83				
84				
85				
86	1	US 20013	Solenoid valve	Open product butterfly
87				valve HK20013
88				HP-GAN to customer 1
89				
90				
91				
92				
93				
94				
95				
96				
97				
98				

JOB NO.	FILE NO	REV.	DATE	REVISIONS	BY	CHKD.
		Rev3	08.6.07	"as built"	Frohn	Stippich
		Rev2	02.2.06		Frohn	Eichler

PROJECT NAME: ASU KOSICE

PLANT PART: COLD BOX

AIR LIQUIDE

Air Liquide AGS GmbH
Fütingsweg 34
47805 Krefeld

DRAWING NAME: COLD BOX

HP-GOX PROD. TO CUSTOMER
FI200013 - HIC/US20014

SIZE: A3

FUNKTION DIAGRAM

DRWG. NO.: K70101_114.dwg

PROJ. NO.: K70101

REPLACES: REPLACED BY: BASED:

DATE: 17.06.2005
AUTHOR: Frohn
CHECK: Eichler
STD.:

Comment	Origin	Type	Signal-/TAG-No.	Path
				1
				2
				3
				4
				5
				6
				7
				8
				9
				10
				11
				12
				13
				14
				15
				16
				17
				18
				19
				20
				21
				22
				23
				24
				25
				26
				27
				28
				29
				30
				31
Differrence press.	Value < Min	1	PDL20014	32
				33
Differrence press.	Value < Min	1	DPL20016	34
				35
				36
				37
				38
				39
				40
				41
				42
				43
				44
				45
				46
				47
				48

Function

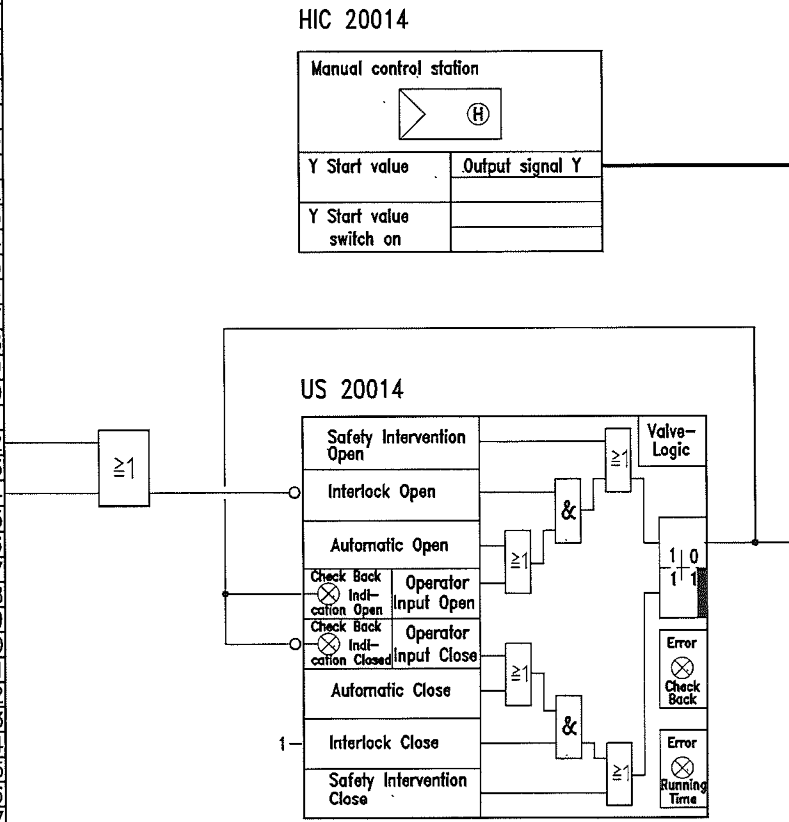

Path	Type	Signal/TAG-No.	Destination	Comment
51				
52				
53				
54				
55				
56				
57				
58				
59				
60				
61				
62				
63				
64				
65				
66				
67				
68				
69				
70				
71	E	H20014	Positioner 0-100%	Bypass valve
72			= 4...20mA	HV200014
73				
74				
75				
76				
77				
78				
79				
80				
81				
82				
83				
84				
85				
86	1	US 20014	Solenoid valve	Open product butterfly
87				valve HK20014
88				HP-GAN to customer 2
89				
90				
91				
92				
93				
94				
95				
96				
97				
98				

JOB NO.	FILE NO	REV.	DATE	REVISIONS	BY	CHKD.
		Rev3	08.6.07	"as built"	Frohn	Stippich
		Rev2	02.2.06		Frohn	Eichler

PROJECT NAME: ASU KOSICE

PLANT PART: COLD BOX

AIR LIQUIDE

Air Liquide AGS GmbH
Fütingsweg 34
47805 Krefeld

DRAWING NAME:
COLD BOX
HP-GOX PROD. TO CUSTOMER 2
HIC/US20014

SIZE: A3 — FUNKTION DIAGRAM

DRWG. NO.: K70101_115.dwg

PROJ. NO.: K70101

REPLACES: | REPLACED BY:

DATE: 17.06.2005
AUTHOR: Frohn
CHECK: Eichler
STD.:

BASED:

Rang.	Comment	Origin	Type	Signal-/TAG-No.	Path
	GAN inlet heat ex-	Pt100	E	T 20005	10
	changer				11
	GOX inlet heat ex-	Pt100	E	T 20007	12
	changer				13
	Waste N2 inlet heat	Pt100	E	T 20009	14
	exchanger				15
	Air outlet heat exch.	Pt100	E	T 20006	16
					17
	GAN inlet heat exch.	Pt100	E	T 20010	18

Function

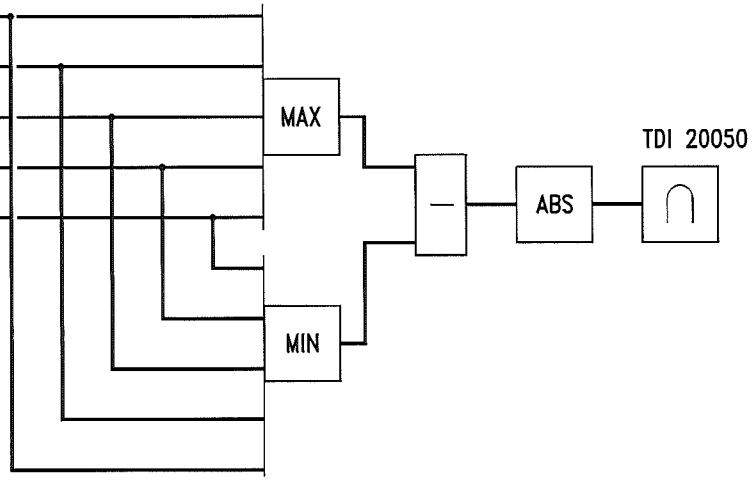

Path	Type	Signal/TAG-No.	Destination	Comment	Rang.
51					
52					
53					
54					
55					
56					
57					
58					
59					
60					
61					
62					
63					
64					
65					
66					
67					
68					
69					
70					
71					
72					
73					
74					
75					
76					
77					
78					
79					
80					
81					
82					
83					
84					
85					
86					
87					
88					
89					
90					
91					
92					
93					
94					
95					
96					
97					
98					

JOB NO.	FILE NO	REV	DATE	REVISIONS	BY	CHKD.
		Rev3	08.6.07	"as built"	Frohn	Stippich
		Rev2	02.2.06		Frohn	Eichler

PROJECT NAME: ASU KOSICE

PLANT PART: COLD BOX

AIR LIQUIDE

Air Liquide AGS GmbH
Fütingsweg 34
47805 Krefeld

DRAWING NAME:
COLD BOX
DIFFERENCE TEMPERATURES
MAIN HEAT EXCHANGER

SIZE: A3

FUNKTION DIAGRAM

DRWG. NO.: K70101_116.dwg

PROJ. NO.: K70101

REPLACES: REPLACED BY: BASED:

DATE: 17.06.2005
AUTHOR: Frohn
CHECK: Eichler
STD.:

Rang.	Comment	Origin	Type	Signal-/TAG-No.	Path
	LIN reflux	DP-Transmitter	E	FT 22013	27
	Trip cold box	from page no.101/67	1	US 20000_dyn	34

Function

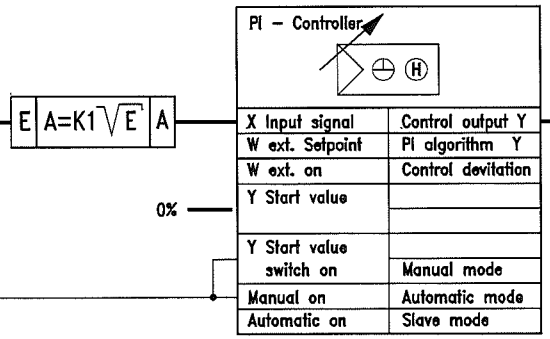

Path	Type	Signal/TAG-No.	Destination	Comment	Rang.
77	E	FV 22013	Positioner 4-20mA = 0-100%	LIN reflux FV 22013	

Rev3	08.6.07	"as built"	Frohn	Stippich	
Rev2	02.2.06		Frohn	Eichler	
JOB NO.	FILE NO	REV.	DATE	REVISIONS	BY / CHKD.

PROJECT NAME: ASU KOSICE

PLANT PART: COLD BOX

AIR LIQUIDE

Air Liquide AGS GmbH
Fütingsweg 34
47805 Krefeld

DRAWING NAME: COLD BOX U-LIN TO LP-COLUMN FIC 22013

SIZE: A3

FUNKTION DIAGRAM

DRWG. NO.: K70101_117.dwg

PROJ. NO.: K70101

REPLACES: REPLACED BY:

DATE: 17.06.2005
AUTHOR: Frohn
CHECK: Eichler
STD.:

BASED:

Comment	Origin	Type	Signal-/TAG-No.	Path
Argon sidearmgas	%O2-analyzer	E	Q 40011	10
GOX from LP-column	F-transmitter	E	FT 20043	32
LP-column bottom	P-transmitter	E	PT 22001	34
Constant for temp.	– 180°C	E		36
Trip Cold box	from page no.101/69	1	US 20000_dyn	41

Function

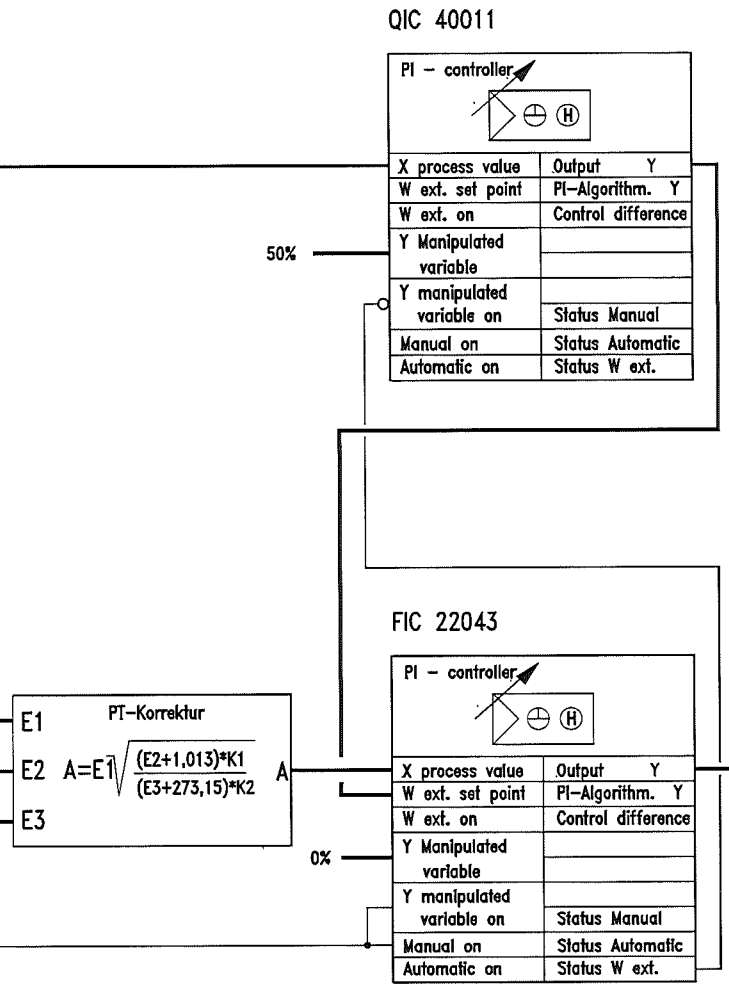

Path	Type	Signal/TAG-No.	Destination	Comment
84	E	FV 22043	Positioner 0–100%	Control valve
85			=4–20mA	GOX from LP-column
86				FV 22043

		Rev3	08.6.07	"as built"	Frohn	Stippich
		Rev2	02.2.06		Frohn	Eichler
JOB NO.	FILE NO.	REV.	DATE	REVISIONS	BY	CHKD.

PROJECT NAME: ASU KOSICE

PLANT PART: COLD BOX

AIR LIQUIDE

Air Liquide AGS GmbH
Fütingsweg 34
47805 Krefeld

DRAWING NAME: COLD BOX

CASCADE SIDEARMGAS ANALYSIS
QIC 40011 / FIC 22043

SIZE: A3

FUNKTION DIAGRAM

DRWG. NO.: K70101_0118.dwg

PROJ. NO.: K70101

REPLACES: REPLACED BY: BASED:

DATE: 17.06.2005
AUTHOR: Frohn
CHECK: Eichler
STD.:

Rang.	Comment	Origin	Type	Signal-/TAG-No.	Path
	Sump LP-column	PD-Transmitter 0-100%	E	L 22001	8
	Trip LOX-product	from page no.120/67	1	US 22001_dyn	15
	Trip LOX-product	from page no.120/75	1	US 22001_dyn1	35
	Trip cold box	from page no.101/59	1	US 20000_dyn	38
	Lox dump no ready		1	US 90014	40

Function

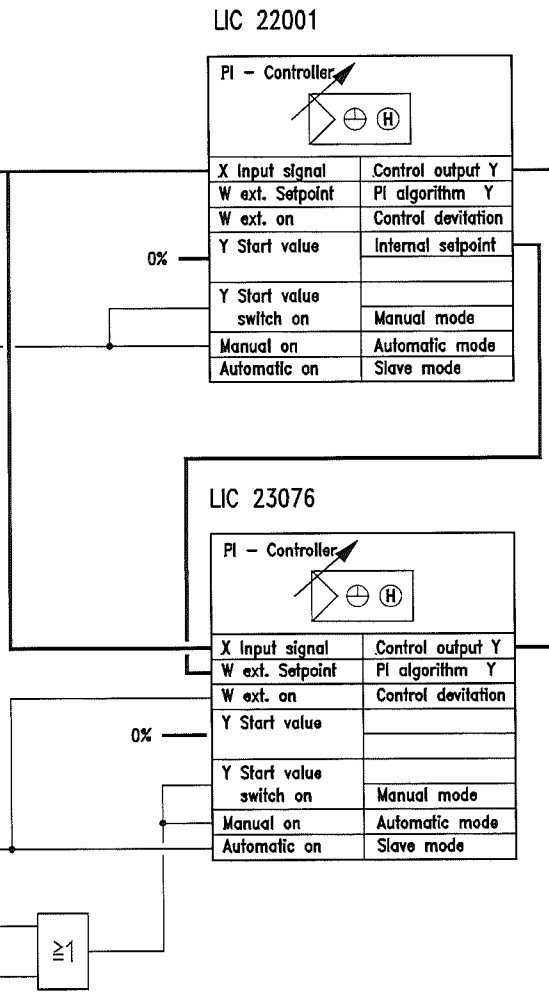

Path	Type	Signal/TAG-No.	Destination	Comment	Rang.
58	E	LV 22001	Positioner 4...20mA = 0-100%	Control valve LV22001 LOX to storage	
77	E	LV 23076	Positioner 4-20mA = 0-100%	Control valve LOX TO DUMP	

JOB NO.	FILE NO	REV.	DATE	REVISIONS	BY	CHKD.
		Rev3	08.6.07	"as built"	Frohn	Stippich
		Rev2	02.2.06		Frohn	Eichler

PROJECT NAME: ASU KOSICE

PLANT PART: COLD BOX

AIR LIQUIDE

Air Liquide AGS GmbH
Fütingsweg 34
47805 Krefeld

DRAWING NAME: COLD BOX
LOX TO STORAGE / LOX TO DUMP
LIC 22001 / LIC 23076

SIZE: A3

FUNKTION DIAGRAM

DRWG. NO.: K70101_119.dwg

PROJ. NO.: K70101

REPLACES: REPLACED BY: BASED:

DATE: 17.06.2005
AUTHOR: Frohn
CHECK: Eichler
STD.:

Rang.	Comment	Origin	Type	Signal-/TAG-No.	Path
					1
					2
					3
					4
					5
	Reset trip LOX	Software button OS	1	HS 22001	6
					7
					8
					9
					10
					11
					12
					13
					14
	Trip cold box	from page no.100/80	1	US 20000	15
					16
					17
					18
					19
					20
					21
					22
					23
					24
	LOX to storage	Value < Min2	1	QLL 23016	25
	%O2 analyzer				26
					27
	Hardware logic	Contact ESD-relay	1	UA 62051	28
					29
	Inlet valve LOX-tank	from page TL001/62	1	HS 62051	30
	open				31
					32
	Trip LOX-pump	from page no.151/70	1	US 61100	33
	P61100				34
	Trip LOX-pump	from page no.158/70	1	US 61200	35
	P61200				36
					37
					38
					39
					40
					41
					42
					43
					44
					45
					46
					47
					48

Function

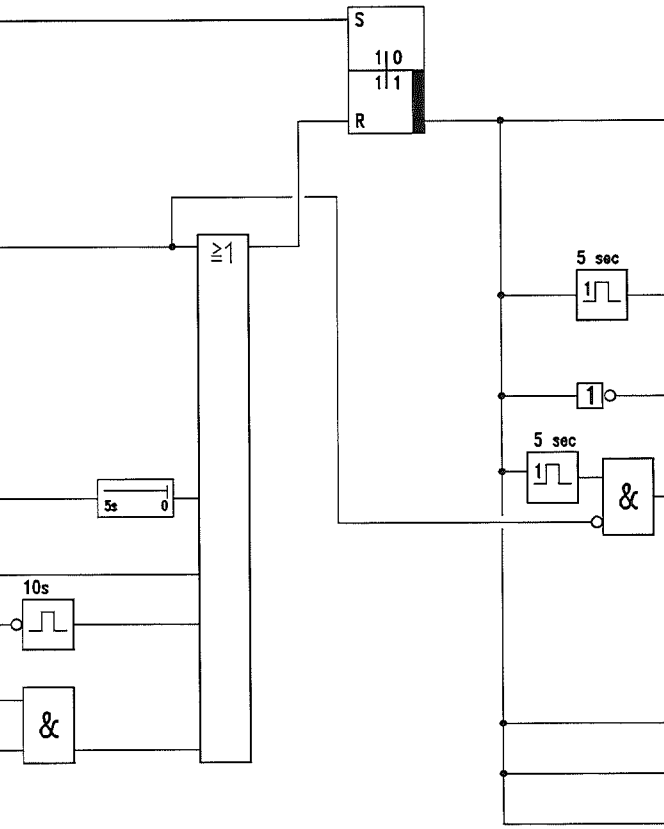

Path	Type	Signal/TAG-No.	Destination	Comment	Rang.
51					
52					
53					
54					
55					
56					
57					
58					
59					
60	1	UA 22001	Alarm OS	"Trip LOX product"	
61					
62					
63					
64					
65					
66					
67	1	US 22001_dyn	to page no. 119/15	LOX product to tank	
68				LIC 22001 manual, Y=0%	
69					
70					
71	0	US 22001	Close solenoid valve	Close LV 22001	
72			UV 22001	LOX to tank BL62001	
73					
74					
75	1	US 22001_dyn1	to page no. 119/35	LOX to dump	
76				LIC 22076 on "Auto"	
77				External setpoint from	
78				LIC 22001	
79					
80					
81					
82					
83					
84	1	US 22001	to page no. 184/18	TIC 90008 on "Auto"	
85				Steam to dump vap.	
86	1	US 22001	to page no. 182/20	Open HV 90014	
87					
88	1	US 22001	Y=0%	HV 90004	
89					
90					
91					
92					
93					
94					
95					
96					
97					
98					

JOB NO.	FILE NO.	REV.	DATE	REVISIONS	BY	CHKD.
		Rev3	08.6.07	"as built"	Frohn	Stippich
		Rev2	02.2.06		Frohn	Eichler

PROJECT NAME: ASU KOSICE

PLANT PART: COLD BOX

AIR LIQUIDE

Air Liquide AGS GmbH
Fütingsweg 34
47805 Krefeld

DRAWING NAME: COLD BOX

TRIP LOX-PRODUCT TO STORAGE
US 22001

SIZE: A3

FUNKTION DIAGRAM

DRWG. NO.: K70101_120.dwg

PROJ. NO.: K70101

REPLACES: REPLACED BY: BASED:

DATE: 17.06.2005
AUTHOR: Frohn
CHECK: Eichler
STD.:

Page no. 120
OF 230 Pages

Rang.	Comment	Origin	Type	Signal-/TAG-No.	Path
					1
					2
					3
					4
					5
	Reset trip LIN	Software button OS	1	HS 23013	6
					7
					8
					9
					10
					11
					12
					13
					14
	Trip cold box	from page no.100/82	1	US 20000	15
					16
					17
					18
					19
					20
					21
					22
					23
					24
	LIN to storage	Value > Max2	1	QHH 23013	25
	ppm02 analyzer				26
					27
	Hardware logic	Contact ESD-relay	1	UA 72051	28
					29
	Inlet valve LIN-Tank	from page TF_55/62	1	HS 72051	30
	open				31
					32
	Trip LIN-Pump	from page no.165/70	1	US 71100	33
	P71100				34
	Trip LIN-Pump	from page no.172/70	1	US 71200	35
	P71200				36
					37
					38
					39
					40
					41
					42
					43
					44
					45
					46
					47
					48

Function

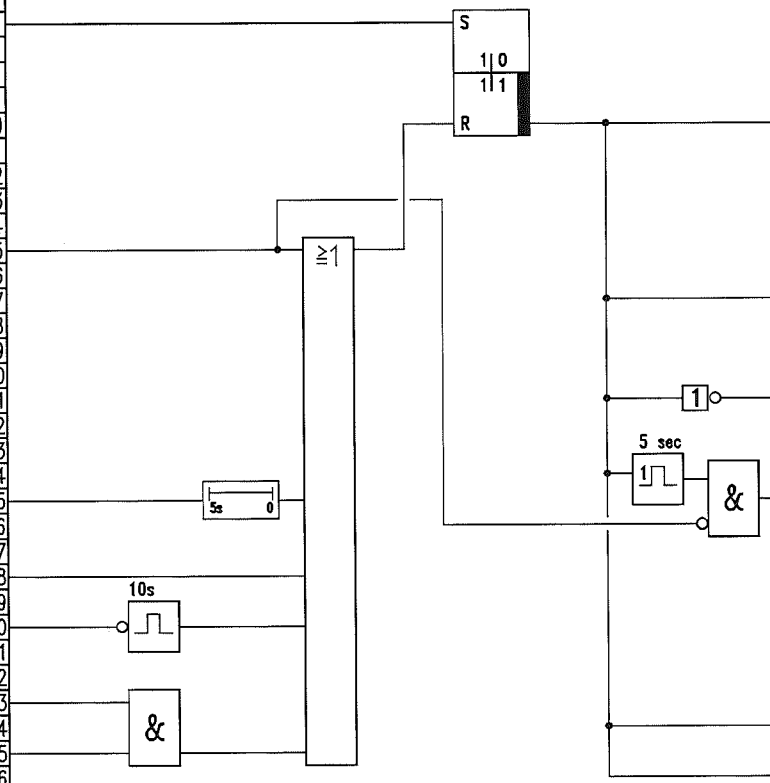

Path	Type	Signal/TAG-No.	Destination	Comment	Rang.
51					
52					
53					
54					
55					
56					
57					
58					
59					
60	1	UA 23013	Alarm OS	"Trip LIN product"	
61					
62					
63					
64					
65					
66					
67	1	US 23013	to page no. 122/15	LIN product to tank	
68				FIC23013 manual, Y=0%	
69					
70					
71	0	US 23013	Close solenoid valve	Close FV 23013	
72			UV 23013	LIN to tank BL72001	
73					
74					
75	1	FIC23073_dyn1	to page no. 122/35	LIN to dump	
76				FIC 23073	
77				Controller on "Auto"	
78				Ext. setpoint from	
79				FIC 23013	
80					
81					
82					
83					
84	1	US 23013	to page no. 184/20	TIC 90008 on "Auto"	
85				Steam to dump vap.	
86	1	US 23013	to page no. 181/20	Open HV 90013	
87					
88					
89					
90					
91					
92					
93					
94					
95					
96					
97					
98					

JOB NO.	FILE NO	REV.	DATE	REVISIONS	BY	CHKD.
		Rev3	08.6.07	"as built"	Frohn	Stippich
		Rev2	02.2.06		Frohn	Eichler

PROJECT NAME: ASU KOSICE

PLANT PART: COLD BOX

AIR LIQUIDE

Air Liquide AGS GmbH
Fütingsweg 34
47805 Krefeld

DRAWING NAME: COLD BOX

TRIP LIN-PRODUCT TO STORAGE
US 23013

SIZE: A3

FUNKTION DIAGRAM

DRWG. NO.: K70101_121.dwg

PROJ. NO.: K70101

REPLACES: REPLACED BY:

DATE: 17.06.2005
AUTHOR: Frohn
CHECK: Eichler
STD.:

Page no. 121
Of 230 Pages

BASED:

Rang.	Comment	Origin	Type	Signal-/TAG-No.	Path
					1
					2
					3
					4
					5
					6
					7
	LIN to storage	Flow-transmitter	E	F 23013	8
					9
					10
					11
					12
					13
					14
	Trip LIN-product	from page no.121/67	1	US 23013	15
					16
					17
					18
					19
					20
					21
					22
					23
					24
					25
					26
					27
					28
					29
					30
					31
					32
					33
					34
	Trip LIN-product	from page no.121/75	1	US 23013_dyn1	35
					36
	Trip cold box	from page no.101/57	1	US 20000_dyn	37
					38
	LIN dump not ready		1	US 90013	39
					40
					41
					42
					43
					44
					45
					46
					47
					48

Function

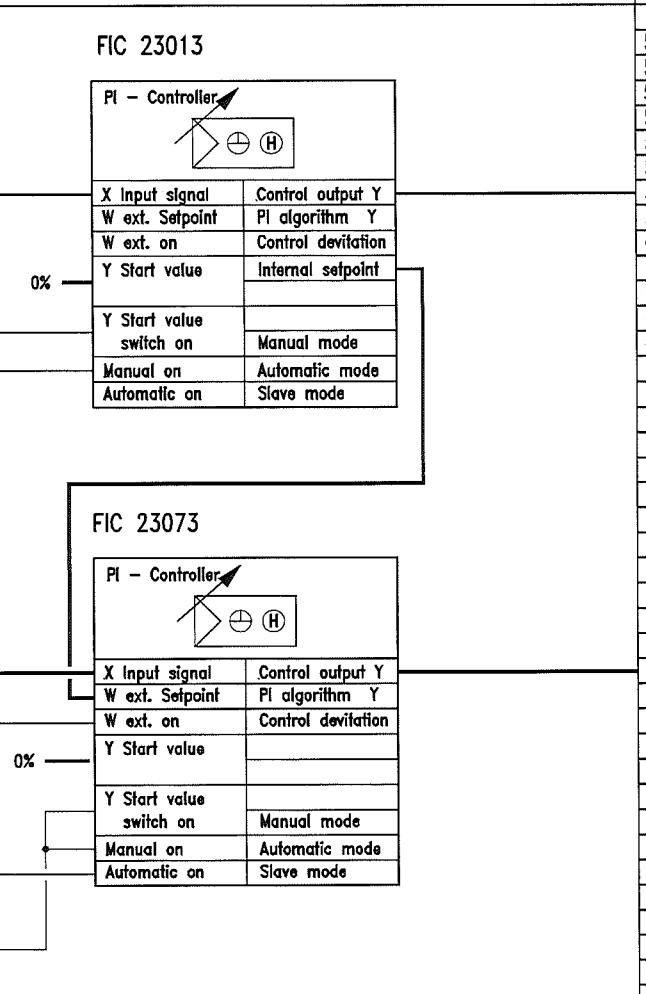

Path	Type	Signal/TAG-No.	Destination	Comment	Rang.
51					
52					
53					
54					
55					
56					
57					
58	E	LV 23013	Positioner 4...20mA	Control valve LV23013	
59			= 0-100%	LIN to storage	
60					
61					
62					
63					
64					
65					
66					
67					
68					
69					
70					
71					
72					
73					
74					
75					
76					
77	E	LV 23073	Positioner 4-20mA	Control valve LV23073	
78			= 0-100%	LIN to dump	
79					
80					
81					
82					
83					
84					
85					
86					
87					
88					
89					
90					
91					
92					
93					
94					
95					
96					
97					
98					

JOB NO.	FILE NO.	REV.	DATE	REVISIONS	BY	CHKD.
		Rev3	08.6.07	"as built"	Frohn	Stippich
		Rev2	02.2.06		Frohn	Eichler

PROJECT NAME: ASU KOSICE

PLANT PART: COLD BOX

AIR LIQUIDE

Air Liquide AGS GmbH
Fütingsweg 34
47805 Krefeld

DRAWING NAME: COLD BOX

LIN TO STORAGE / LIN TO DUMP
FIC 23013 / FIC 23073

SIZE: A3

FUNKTION DIAGRAM

DRWG. NO.: K70101_122.dwg

PROJ. NO.: K70101

REPLACES: REPLACED BY:

DATE: 17.06.2005
AUTHOR: Frohn
CHECK: Eichler
STD.:

BASED:

Comment	Origin	Type	Signal-/TAG-No.	Path	Function	Path	Type	Signal/TAG-No.	Destination	Comment
				1		51				
				2		52				
				3		53				
				4		54				
				5		55				
				6		56				
				7		57				
				8		58				
				9		59				
				10		60				
				11		61				
				12		62				
				13		63				
				14		64				
				15		65				
				16		66				
				17		67				
				18		68				
				19		69				
				20		70				
				21		71				
				22		72				
				23		73				
				24		74				
				25		75				
				26		76				
				27		77				
				28		78				
				29		79				
				30		80				
				31		81				
				32		82				
				33		83				
				34		84				
				35		85				
				36		86				
				37		87				
				38		88				
				39		89				
				40		90				
				41		91				
				42		92				
				43		93				
				44		94				
				45		95				
				46		96				
				47		97				
				48		98				

JOB NO.	FILE NO	REV.	DATE	REVISIONS	BY	CHKD.
		Rev3	08.6.07	"as built"	Frohn	Stippich
		Rev2	02.2.06		Frohn	Eichler

PROJECT NAME: ASU KOSICE

PLANT PART: COLD BOX

AIR LIQUIDE

Air Liquide AGS GmbH
Fütingsweg 34
47805 Krefeld

DRAWING NAME: SPARE

SIZE: A3

FUNKTION DIAGRAM

DRWG. NO.: K70101_123.dwg

PROJ. NO.: K70101

REPLACES: REPLACED BY:

DATE: 17.06.2005
AUTHOR: Frohn
CHECK: Eichler
STD.:

Page no. 123
Of 230 Pages

BASED:

Comment	Origin	Type	Signal-/TAG-No.	Path
Air to expander 1	PD-Transmitter	E	FT24101	4
Air to expander 1	P-Transmitter	E	PT24101	6
Air to expander 1	Pt100	E	TE24101	8
Trip expander turb.1	from page no.125/71	1	US 24100_dyn	24
Quick shut valve	from page no.12782	1	HS 24101	26

Function

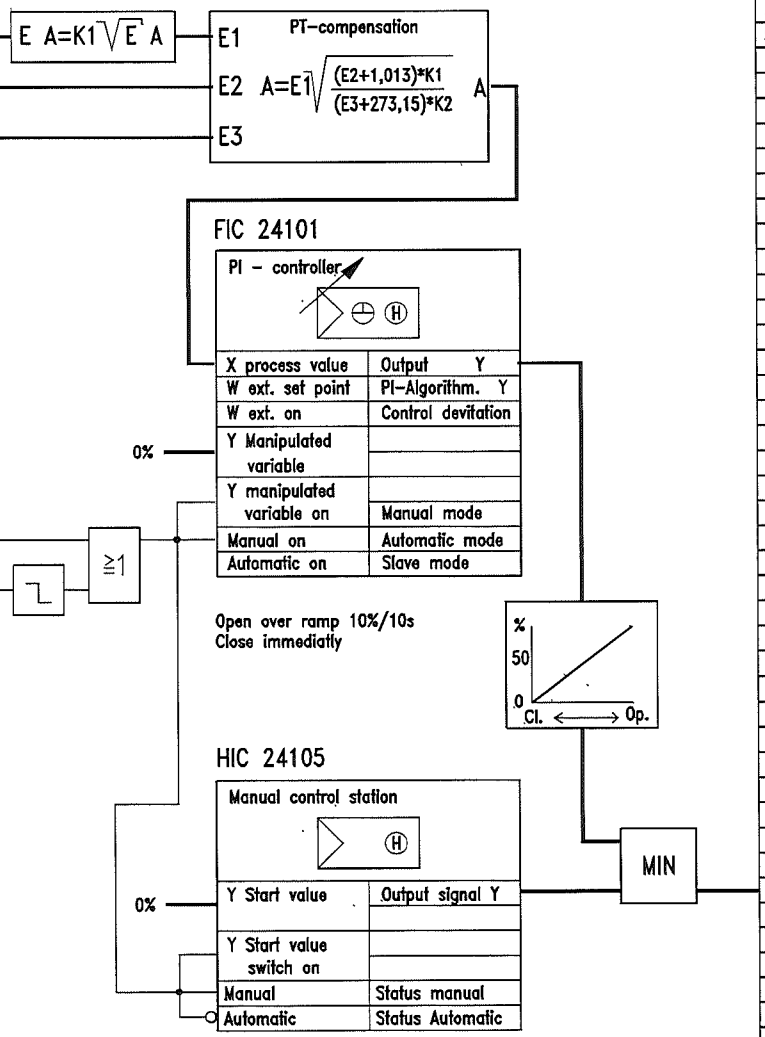

Path	Type	Signal/TAG-No.	Destination	Comment
88	E	HC24105	Positioner 0...100% = 4..20mA	Nozzle valve expander

JOB NO.	FILE NO	REV.	DATE	REVISIONS	BY	CHKD.
		Rev3	08.6.07	"as built"	Frohn	Stippich
		Rev2	02.2.06		Frohn	Eichler

PROJECT NAME: ASU KOSICE

PLANT PART: EXPANDER

AIR LIQUIDE

Air Liquide AGS GmbH
Fütingsweg 34
47805 Krefeld

DRAWING NAME: AIR TO EXPANDER TURBINE 1 NOZZLE ADJUSTMENT FIC 24101 / HIC 24101

SIZE: A3

FUNKTION DIAGRAM

DRWG. NO.: K70101_124.dwg

PROJ. NO.: K70101

REPLACES: REPLACED BY: BASED:

DATE: 17.06.2005
AUTHOR: Frohn
CHECK: Eichler
STD.:

Rang.	Comment	Origin	Type	Signal-/TAG-No.	Path
					1
					2
					3
					4
					5
	Reset trip turbine 1	Software button OS	1	HS 24100	6
					7
					8
					9
	Emergency shut down	ESD button	0	HZ 24100	10
					11
	Deriming turb. 1 on	Software switch OS	1	HS 24106	12
					13
	Trip cold box	from page no.100/58	1	US 20000	14
					15
	Speed expander	Value > Max2	1	SHH 24124	16
					17
	Speed expander	Contact > Max2	0	SHH 24124	18
					19
					20
					21
	Quick shut off valve	from page no.127/75	1	HS 24101	22
	open				23
	Speed expander	Value < Min2	1	SLL 24124	24
					25
	Vibration expander	Value > Max2	1	XHH 24124	26
	Expander on	from page no.127/80	1	HS 24101	27
	Air inlet expander	Value < Min2	1	TLL 24101	28
					29
	Bearing expander	Value > Max2	1	THH 24120	30
	Bearing expander	Value > Max2	1	THH 24121	31
	Bearing expander	Value > Max2	1	THH 24123	32
					33
	Seal gas supply	Value < Min2	1	PLL 24144	34
	Oil press. expander	Value < Min2	1	PLL 24169	35
	Oil press. expander	Contact < Min2	0	PLL 24168	36
	Oil temp. expander	Value > Max2	1	THH 24169	37
	Oil behind gearbox	Value > Max2	1	THH 24151	38
					39
	Bearing generator	Value > Max2	1	THH 24171	40
	Bearing generator	Value > Max2	1	THH 24173	41
					42
	Winding U generator	Value > Max2	1	THH 24175	43
	Winding V generator	Value > Max2	1	THH 24176	44
	Winding W generator	Value > Max2	1	THH 24177	45
					46
	Fail generator	from page no.131/95	1	US 24110_fail	47
					48

Function

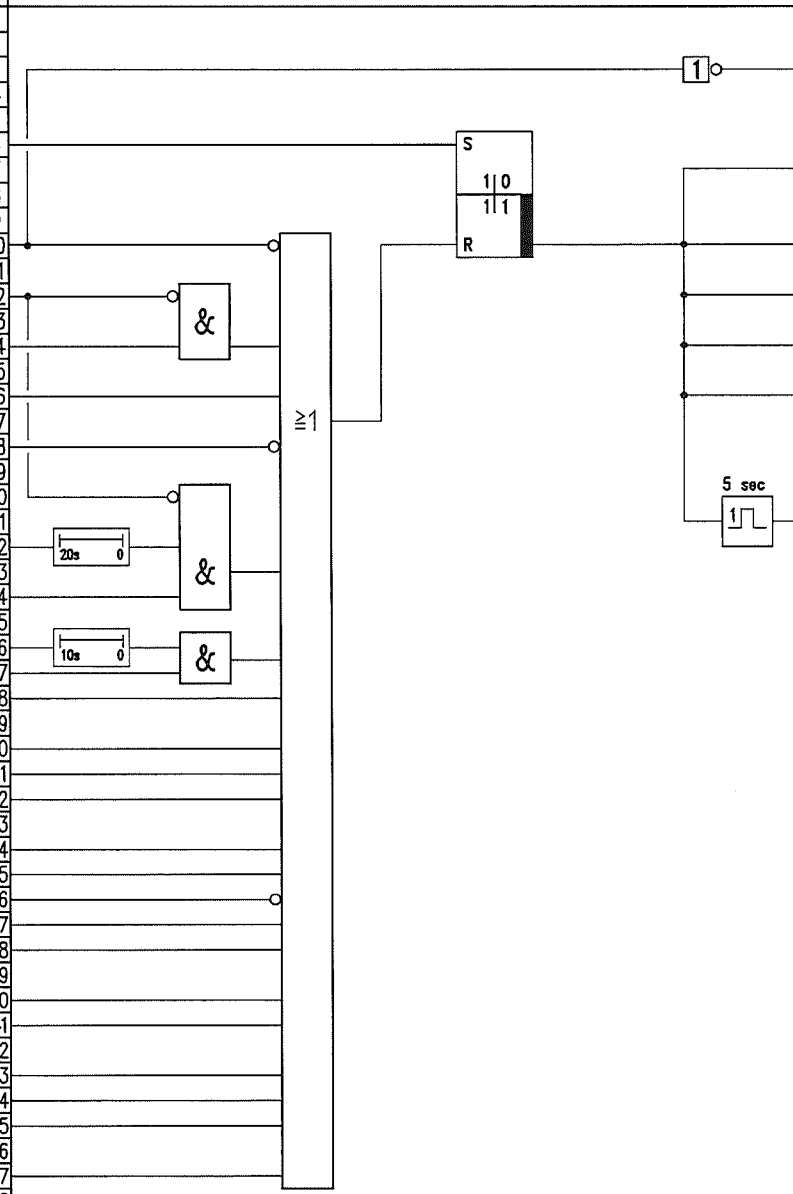

Path	Type	Signal/TAG-No.	Destination	Comment	Rang.
51					
52					
53	1	HA 24100	Alarm OS	"Emergency shut down"	
54				turbine 1	
55					
56					
57	1	UA 24100	Alarm OS	"Trip expander turbine 1"	
58					
59					
60	1	US 24100	to page no. 126/7	Trip expander turb. 1	
61					
62	1	US 24100	to page no. 127/40	Close shut off valve	
63				UK 24101	
64	1	US 24100	to page no. 130/9	Oilpump expander on	
65				HS 24163	
66	1	US 24100	to page no. 131/33	Generator off	
67				US 24110	
68					
69					
70					
71	1	US 24100_dyn	to page no. 124/24	FIC 24101	
72				Contr. manual/Y=0%	
73					
74					
75					
76					
77					
78					
79					
80					
81					
82					
83					
84					
85					
86					
87					
88					
89					
90					
91					
92					
93					
94					
95					
96					
97					
98					

JOB NO.	FILE NO	REV.	DATE	REVISIONS	BY	CHKD.
		Rev3	08.6.07	"as built"	Frohn	Stippich
		Rev2	02.2.06		Frohn	Eichler

PROJECT NAME: ASU KOSICE

PLANT PART: EXPANDER

AIR LIQUIDE

Air Liquide AGS GmbH
Fütingsweg 34
47805 Krefeld

DRAWING NAME: EXPANDER TURBINE 1
TRIP US24100

SIZE: A3

FUNKTION DIAGRAM

DRWG. NO.: K70101_125.dwg

PROJ. NO.: K70101

REPLACES: REPLACED BY: BASED:

DATE: 17.06.2005
AUTHOR: Frohn
CHECK: Eichler
STD.:

Comment	Origin	Type	Signal-/TAG-No.	Path
				1
				2
Auxilary oil pump on	Check back signal	1	EH 24163	3
				4
Speed expander	Value < Min1	1	SL 24124	5
				6
Trip expander turb. 1	from page no.125/60	1	US 24100	7
				8
Nozzle ring closed	End position switch	1	GL 24105	9
Nozzle ring	Y-Value < 1%	1	HIC 24105	10
Air to expander	Output signal Y<1%	1	FIC 24101	11
				12
Deriming mode	from page no.128/57	1	HS 24106	13
				14
Level oil tank	Level switch < Min	1	LL 24160	15
				16
Oil behind cooler	Value > Max1	1	TH 24169	17
Oil press. expander	Value < Min1	1	PL 24169	18
				19
Seal gas to gap gas	Value < Min	1	PDL 24141	20
Seal gas supply	Value < Min1	1	PL 24144	21
				22
				23
				24
				25
				26
Vibration expander	Value > Max1	1	XH 24124	27
				28
Quick shut closed	End position switch	1	GL 24101	29
				30
				31
				32
				33
				34
Air to MHE open	End position switch	1	GH 20026	35
				36
Air exh. BAC open	End position switch	1	GH 16073	37
				38
				39
				40
Top HP-column	Value > Max	1	PHS 21002	41
Air exh. expander	P-Transmitter	E	PT 24102	42
				43
HP-column Top	PD-Transmitter	E	PDT 21002	44
				45
HP-column	P-Transmitter	E	PDT 21003	46
				47
Constant		E	1.000	48

Function

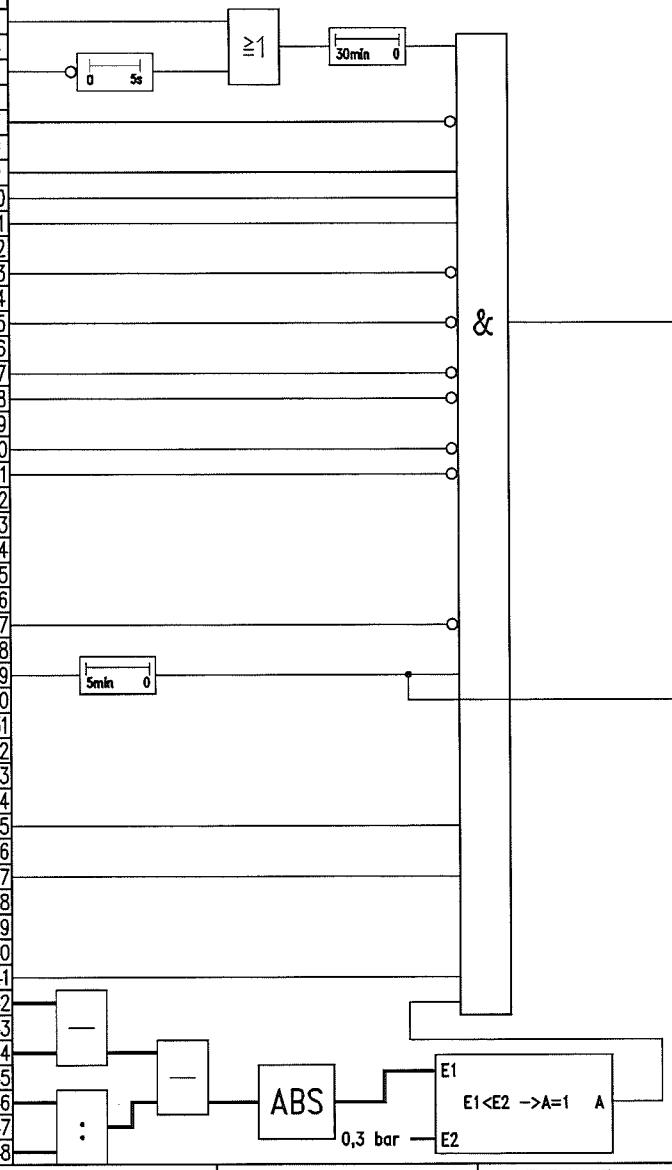

Path	Type	Signal/TAG-No.	Destination	Comment
51				
52				
53				
54				
55				
56				
57				
58				
59				
60				
61				
62				
63				
64				
65	1	UH 24103	to page no. 127/19	Ready to start turb. 1
66				UK 24101
67				
68				
69				
70				
71				
72				
73				
74				
75				
76				
77				
78				
79				
80	1	GL 24101_delay	to page no. 128/12	
81				
82				
83				
84				
85				
86				
87				
88				
89				
90				
91				
92				
93				
94				
95				
96				
97				
98				

JOB NO.	FILE NO	REV.	DATE	REVISIONS	BY	CHKD.
		Rev3	08.6.07	"as built"	Frohn	Stippich
		Rev2	02.2.06		Frohn	Eichler

PROJECT NAME: ASU KOSICE

PLANT PART: EXPANDER

AIR LIQUIDE

Air Liquide AGS GmbH
Fütingsweg 34
47805 Krefeld

DRAWING NAME: EXPANDER TURBINE 1
START CONDITIONS UH24103

SIZE: A3 | FUNKTION DIAGRAM

DRWG. NO.: K70101_126.dwg

PROJ. NO.: K70101

REPLACES: | REPLACED BY: | BASED:

DATE: 17.06.2005
AUTHOR: Frohn
CHECK: Eichler
STD.:

Rang.	Comment	Origin	Type	Signal-/TAG-No.	Path
	Ready to start turb.1	from page no.126/65	1	UH 24103	19
	Quick shut off butterfly valve UK 24101	End position switch	1	GL 24101	34
	Trip expander turb.1	from page no.125/62	1	US 24100	40
	Deriming mode on	from page no.128/53	1	HS 24106	42

Function

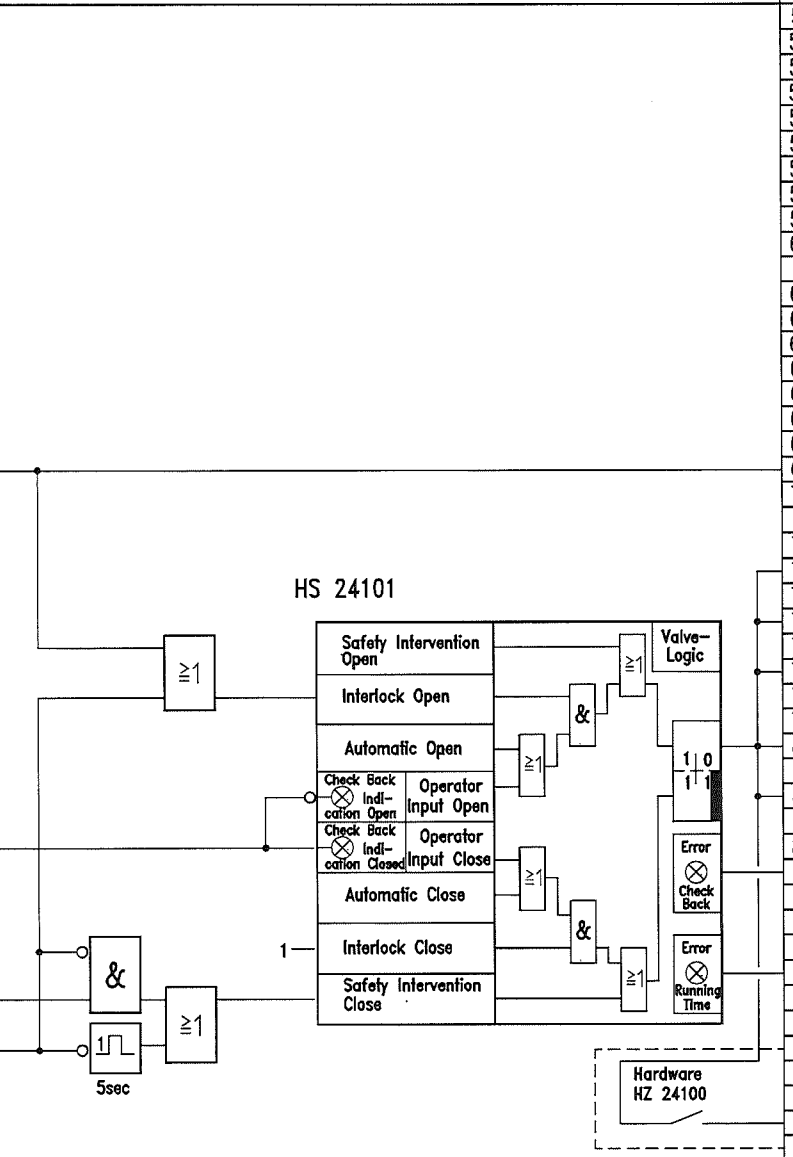

Path	Type	Signal/TAG-No.	Destination	Comment	Rang.
69	1	UOH 24103	Monitoring OS	"Ready to start turb.1"	
73	0	HS 24101	to page no. 131/35	Generator off	
74				US 24110	
75	0	HS 24101	to page no. 125/22	Trip US 24100	
77	1	HS 24101	to page no. 130/29	Oil pump not off	
78			to page no. 130/6	HS 24163	
80	1	HS 24101	to page no. 125/27	Enable vibration	
81				monitoring	
82	1	HS 24101	to page no. 124/27		
85	1	HS 24101_CB	Alarm OS	"Check back error"	
89	1	HS 24101_RT	Alarm OS	"Running time error"	
95	1	HS 24101	Solenoid valve	Open shut off valve	
96			UV 24101 energized	UK 24101	

JOB NO.	FILE NO	REV.	DATE	REVISIONS	BY	CHKD.
		Rev3	08.6.07	"as built"	Frohn	Stippich
		Rev2	02.2.06		Frohn	Eichler

PROJECT NAME: ASU KOSICE

PLANT PART: EXPANDER

AIR LIQUIDE

Air Liquide AGS GmbH
Fütingsweg 34
47805 Krefeld

DRAWING NAME:
EXPANDER TURBINE 1
QUICK SHUT OFF BUTTERFLY VALVE
HS 24101

SIZE: A3

FUNKTION DIAGRAM

DRWG. NO.: K70101_127.dwg

PROJ. NO.: K70101

REPLACES: REPLACED BY: BASED:

DATE: 17.06.2005
AUTHOR: Frohn
CHECK: Eichler
STD.:

Rang.	Comment	Origin	Type	Signal-/TAG-No.	Path
					1
					2
	Defrost expander	Software switch OS	1	HS 24106	3
					4
	Shut off valve closed	from page no.126/80	1	GL 24101_delay	5
					6
					7
					8
					9
	Oil pump on	from page no.130/71	1	HS 24163	10
					11
	Nozzle ring drive ET1	End position switch	1	GL 24105	12
					13
	Quick shut off valve	End position switch	1	GL 24101	14
					15
					16
					17
					18
					19
	Seal gas supply	Value < Min1	1	PL 24144	20
					21
	Oil expander	Contact < Min2	0	PLL 24168	22
					23
					24
					25
					26
					27
					28
					29
					30
					31
					32
					33
	Speed expander	Value > Max	1	SH 24124_1	34
					35
					36
					37
					38
					39
					40
					41
	Outlet expander	Value > Max	1	PH 24102	42
					43
					44
	Emergency shut down	ESD button	0	HA 24100	45
					46
					47
					48

Function

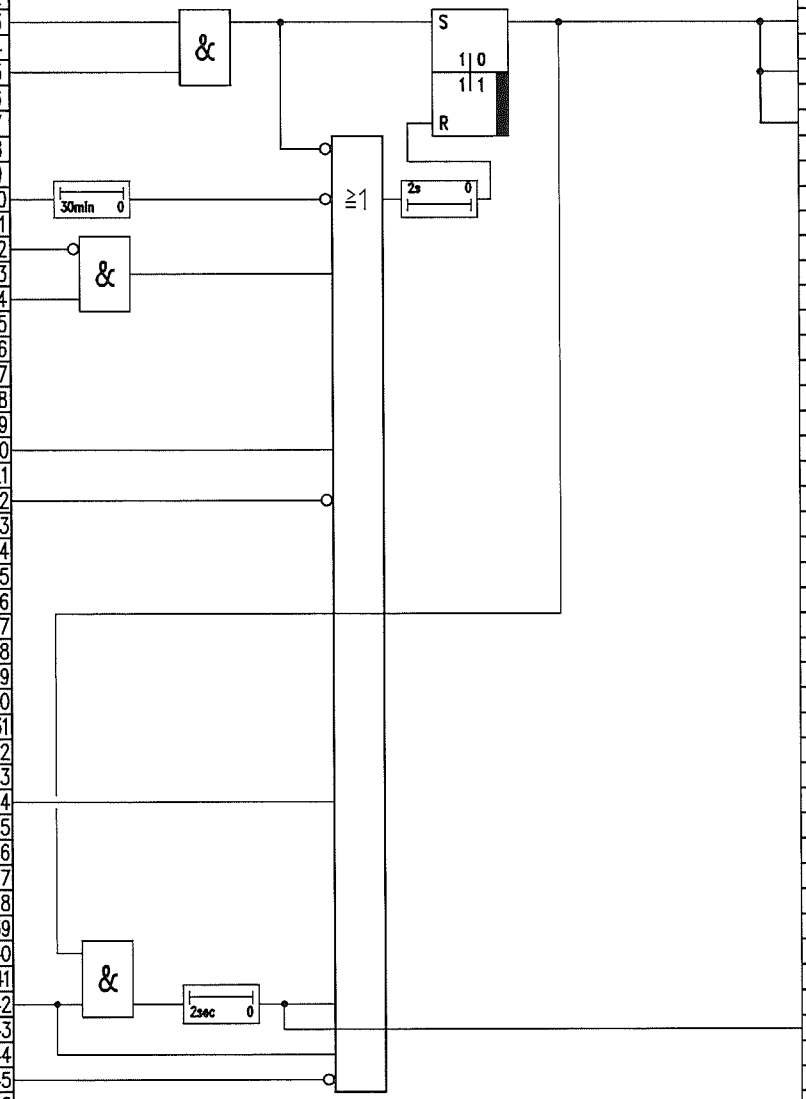

Path	Type	Signal/TAG-No.	Destination	Comment	Rang.
51					
52					
53	1	HS 24106	to page no.127/42	Open shut off valve	
54					
55	1	HS 24106	Monitoring OS	"Deriming mode expander	
56				turbine 1 on"	
57	1	HS 24106	to page no.126/13	Start conditions	
58					
59					
60					
61					
62					
63					
64					
65					
66					
67					
68					
69					
70					
71					
72					
73					
74					
75					
76					
77					
78					
79					
80					
81					
82					
83					
84					
85					
86					
87					
88					
89					
90					
91					
92					
93	1	PAH 24102	Alarm OS	"Pressure outlet exp.	
94				too high"	
95					
96					
97					
98					

JOB NO.	FILE NO	REV.	DATE	REVISIONS	BY	CHKD.
		Rev3	08.6.07	"as built"	Frohn	Stippich
		Rev2	02.2.06		Frohn	Eichler

PROJECT NAME: ASU KOSICE

PLANT PART: EXPANDER

AIR LIQUIDE

Air Liquide AGS GmbH
Fütingsweg 34
47805 Krefeld

DRAWING NAME: EXPANDER TURBINE 1
DERIMING MODE HS24106

SIZE: A3

FUNKTION DIAGRAM

DRWG. NO.: K70101_128.dwg

PROJ. NO.: K70101

REPLACES: REPLACED BY: BASED:

DATE: 17.06.2005
AUTHOR: Frohn
CHECK: Eichler
STD.:

Rang.	Comment	Origin	Type	Signal-/TAG-No.	Path
	Oil heater on	Contact from MCC	1	EH24160	15
	Safety temp. switch	Contact > Max2	1	THH 24160	34
	Level oil tank	Contact < Min	0	LL 24160	36
	Safety temp. switch	Contact > Max	0	TH 24160	47

Function

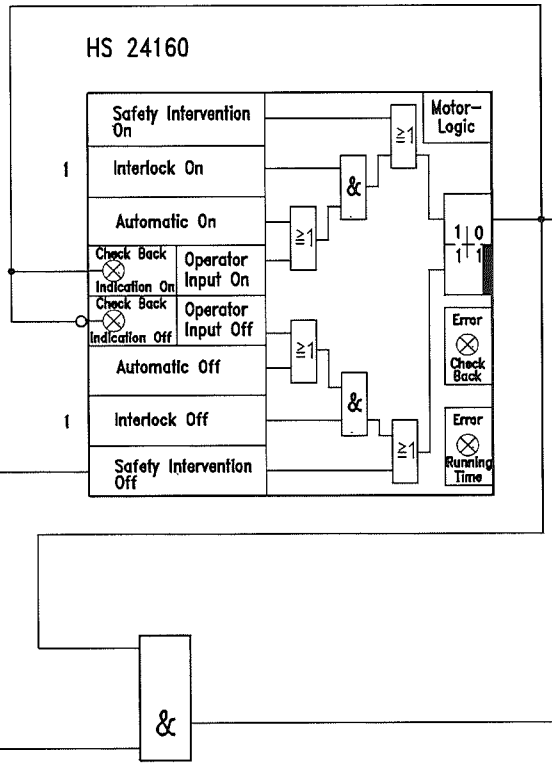

Path	Type	Signal/TAG-No.	Destination	Comment	Rang.
65	1	EOH24260	Monitoring PLS	Oil heater on	
76	1	HS 24160		Oil heater active	
96	1	HS 24160_O	Signal to MCC	Oil heater on	

Rev3	08.6.07	"as built"	Frohn	Stippich	
Rev2	02.2.06		Frohn	Eichler	
JOB NO.	FILE NO.	REV.	DATE	REVISIONS	BY / CHKD.

PROJECT NAME: ASU KOSICE

PLANT PART: EXPANDER

AIR LIQUIDE

Air Liquide AGS GmbH
Fütingsweg 34
47805 Krefeld

DRAWING NAME: EXPANDER TURBINE 1 OIL HEATER HS24160

SIZE: A3

FUNKTION DIAGRAM

DRWG. NO.: K70101_129.dwg

PROJ. NO.: K70101

REPLACES: REPLACED BY: BASED:

DATE: 17.06.2005
AUTHOR: Frohn
CHECK: Eichler
STD.:

Rang.	Comment	Origin	Type	Signal-/TAG-No.	Path
					1
					2
					3
					4
					5
	Ex turbine off	from page no.127/77	0	HS 24101	6
					7
					8
	Trip exp. turbine 1	from page no.125/64	1	US 24100	9
					10
					11
	Shut off valve closed	End position switch	1	GL 24101	12
					13
					14
	Temp. oil tank	Value < Min	1	TL 24161	15
					16
	Seal gas supply	Value < Min1	1	PL 24144	17
					18
	Level oil tank	Level switch < Min1	0	LL 24160	19
					20
					21
					22
	Ex turbine of/off	Check back signal	1	EH 24110	23
					24
	Oil pump on	Check back signal	1	EH 24163	25
					26
	Shut off valve closed	End position switch	1	GL 24101	27
	Speed expander	Value < Min1	1	SLL 24124	28
	Shut off expander	from page no.127/77	1	HS 24101	29
					30
					31
					32
					33
	Seal gas supply	Value < Min2	1	PLL 24144	34
					35
	Shut off valve closed	End position switch	1	GL 24101	36
					37
					38
					39
	Reset trip exp. turb.1	Reset button OS	1	HS 24100	40
					41
					42
					43
					44
					45
					46
					47

Function

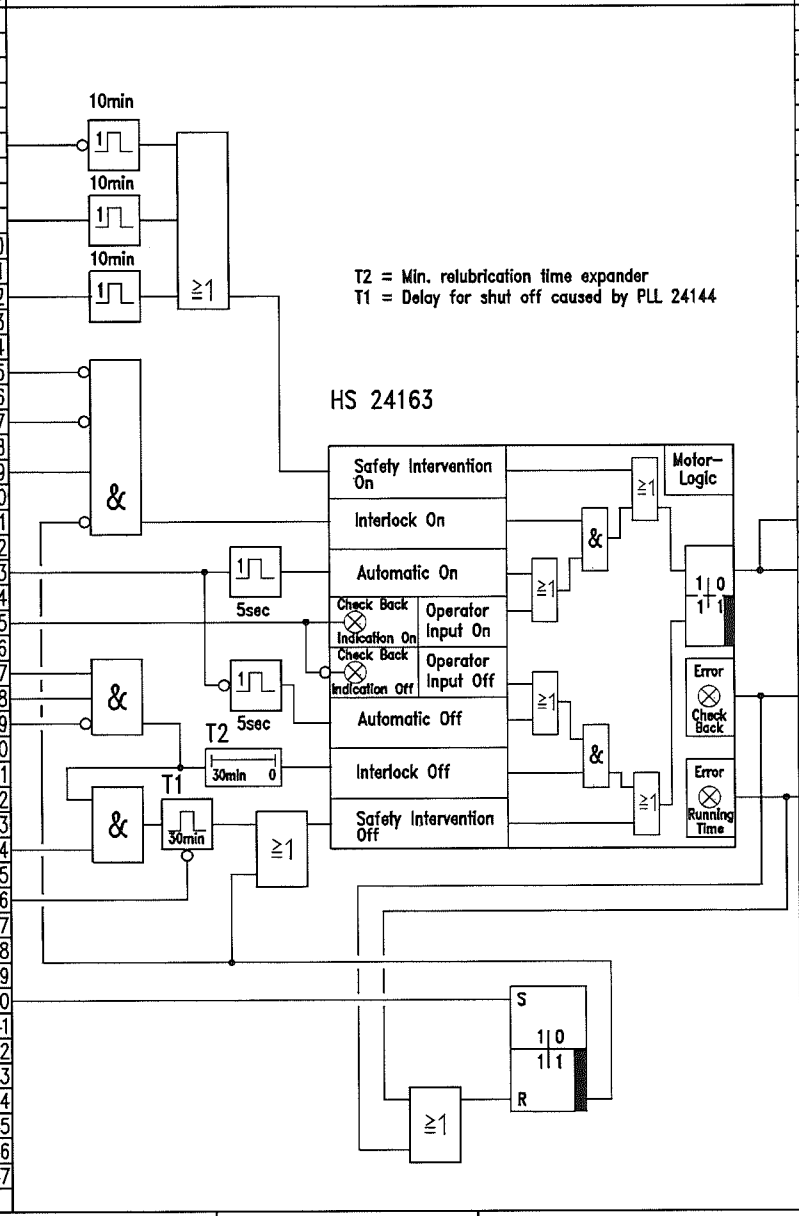

Path	Type	Signal/TAG-No.	Destination	Comment	Rang.
51					
52					
53					
54					
55					
56					
57					
58					
59					
60					
61					
62					
63					
64					
65					
66					
67					
68					
69					
70					
71	0	HS 24163	to page no.128/10	Deriming mode off	
72				HS 24106	
73	1	HS 24163	Signal to MCC	Oil pump P24163 on	
74					
75					
76					
77					
78	1	HS 24163_CB	Alarm OS	"Check back error"	
79					
80					
81					
82	1	HS 24163_RT	Alarm OS	"Running time error"	
83					
84					
85					
86					
87					
88					
89					
90					
91					
92					
93					
94					
95					
96					
97					
98					

JOB NO.	FILE NO.	REV.	DATE	REVISIONS	BY	CHKD.
		Rev3	08.6.07	"as built"	Frohn	Stippich
		Rev2	02.2.06		Frohn	Eichler

PROJECT NAME: ASU KOSICE

PLANT PART: EXPANDER

AIR LIQUIDE

Air Liquide AGS GmbH
Fütingsweg 34
47805 Krefeld

DRAWING NAME:
EXPANDER TURBINE 1
AUXILIARY OIL PUMP HS24163

SIZE: A3

FUNKTION DIAGRAM

DRWG. NO.: K70101_130.dwg

PROJ. NO.: K70101

REPLACES: REPLACED BY: BASED:

DATE: 17.06.2005
AUTHOR: Frohn
CHECK: Eichler
STD.:

Comment	Origin	Type	Signal-/TAG-No.	Path
Speed expander	Contact > Max1	1	SH 24124_2	3
Speed expander	Contact > Max2	1	SHH 24124_1	5
Quick shut off valve	End position switch	1	GL 24101	9
Generator turb. 1 on	Check back signal	1	EH 24110	25
Trip exp. turbine 1	from page no.125/66	1	US 24100	33
Quick shut down	from page no.127/73	0	HS 24101	35
Quick shut off valve	End position switch	1	GL 24101	39
Reset generator exp.1	Software button	1	US24110_RES	41

Function

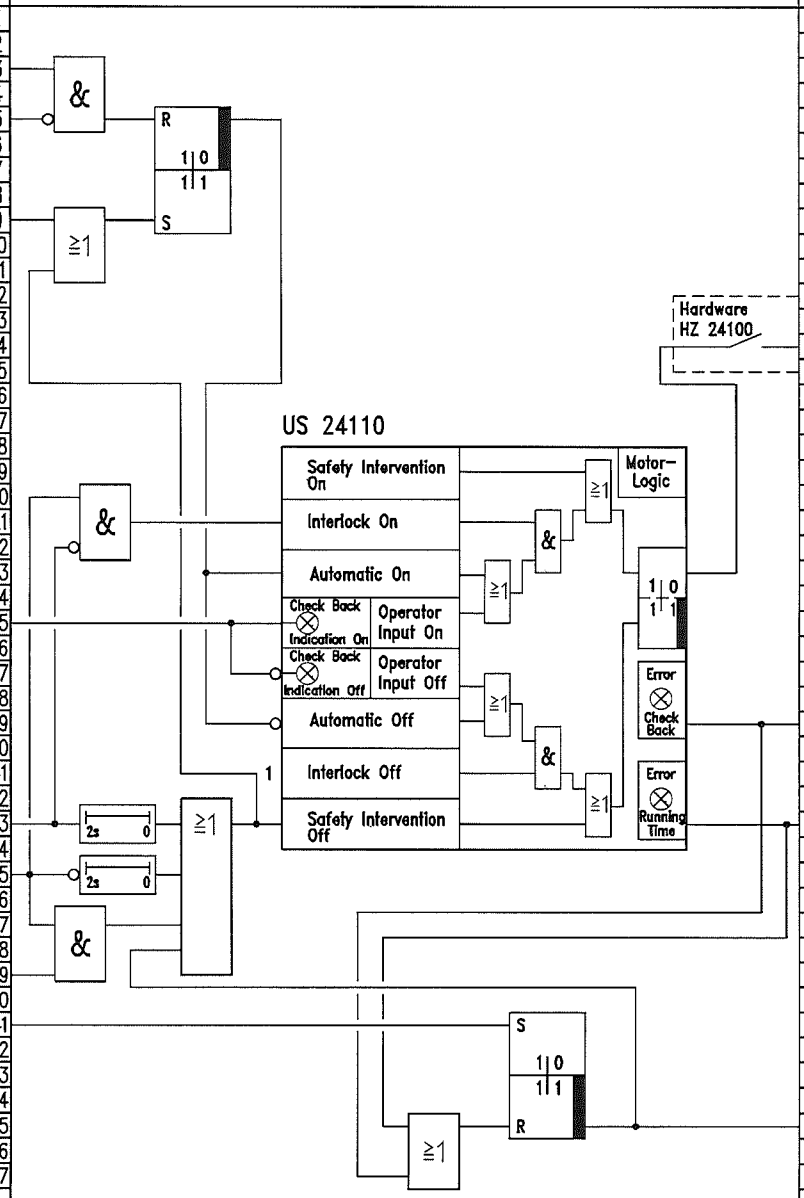

Path	Type	Signal/TAG-No.	Destination	Comment
64	1	US 24110	Signal to MCC	Generator exp. turb.1
65				on
79	1	US 24110_CB	Alarm OS	"Check back error"
83	1	US 24110_RT	Alarm OS	"Running time error"
95	1	US 24110_fail	to page no.125/47	Fail generator

JOB NO.	FILE NO.	REV.	DATE	REVISIONS	BY	CHKD.
		Rev3	08.6.07	"as built"	Frohn	Stippich
		Rev2	02.2.06		Frohn	Eichler

PROJECT NAME: ASU KOSICE

PLANT PART: EXPANDER

AIR LIQUIDE

Air Liquide AGS GmbH
Fütingsweg 34
47805 Krefeld

DRAWING NAME: EXPANDER TURBINE 1 GENERATOR US24110

SIZE: A3 | FUNKTION DIAGRAM

DRWG. NO.: K70101_131.dwg

PROJ. NO.: K70101

REPLACES: | REPLACED BY: | BASED:

DATE: 17.06.2005
AUTHOR: Frohn
CHECK: Eichler
STD.:

Comment	Origin	Type	Signal-/TAG-No.	Path	Function	Path	Type	Signal/TAG-No.	Destination	Comment
				1		51				
				2		52				
				3		53				
				4		54				
				5		55				
				6		56				
				7		57				
				8		58				
				9		59				
				10		60				
				11		61				
				12		62				
				13		63				
				14		64				
				15		65				
				16		66				
				17		67				
				18		68				
				19		69				
				20		70				
				21		71				
				22		72				
				23		73				
				24		74				
				25		75				
				26		76				
				27		77				
				28		78				
				29		79				
				30		80				
				31		81				
				32		82				
				33		83				
				34		84				
				35		85				
				36		86				
				37		87				
				38		88				
				39		89				
				40		90				
				41		91				
				42		92				
				43		93				
				44		94				
				45		95				
				46		96				
				47		97				
				48		98				

JOB NO.	FILE NO	REV.	DATE	REVISIONS	BY	CHKD.
		Rev3	08.6.07	"as built"	Frohn	Stippich
		Rev2	02.2.06		Frohn	Eichler

PROJECT NAME: ASU KOSICE

PLANT PART: EXPANDER

AIR LIQUIDE

Air Liquide AGS GmbH
Fütingsweg 34
47805 Krefeld

DRAWING NAME: EXPANDER TURBINE 1 SPARE

SIZE: A3

FUNKTION DIAGRAM

DRWG. NO.:

PROJ. NO.: K70101

REPLACES: REPLACED BY:

DATE: 17.06.2005
AUTHOR: Frohn
CHECK: Eichler
STD.:

BASED:

Comment	Origin	Type	Signal-/TAG-No.	Path
Air to expander 2	PD-Transmitter	E	FT24201	4
Air to expander 2	P-Transmitter	E	PT24201	6
Air to expander 2	Pt100	E	TE24201	8
Trip expander turb.2	from page no.134/71	1	US 24200_dyn	24
Start position	End position switch	1	GL 24201	26

Function

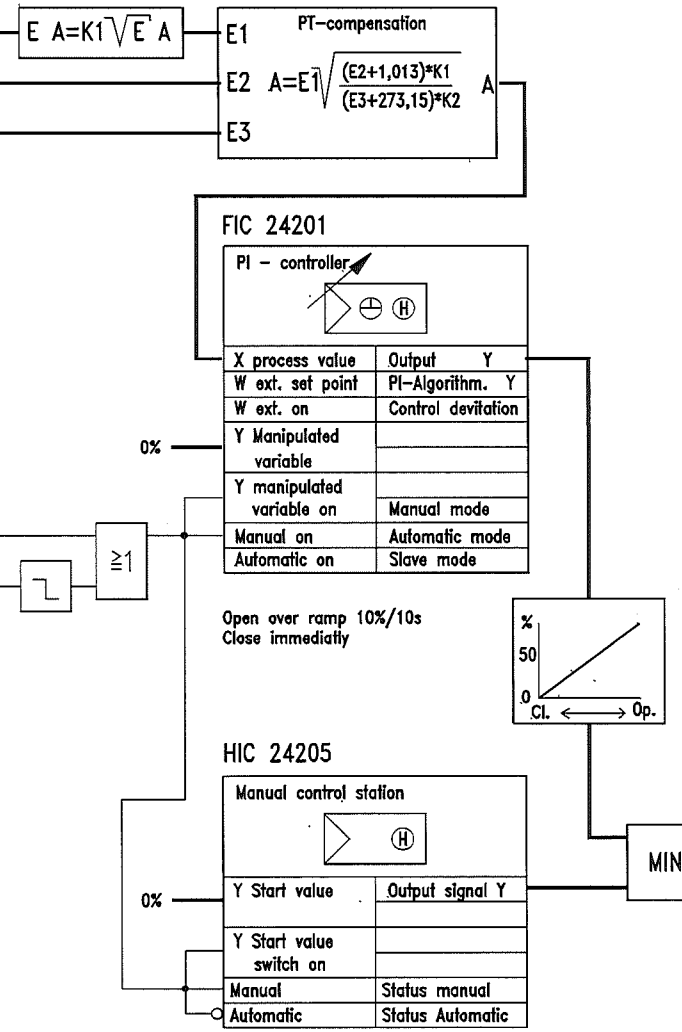

Path	Type	Signal/TAG-No.	Destination	Comment
88	E	HC 24205	Positioner 0...100%	Nozzle valve expander
89			= 4..20mA	

JOB NO.	FILE NO.	REV.	DATE	REVISIONS	BY	CHKD.
		Rev3	08.6.07	"as built"	Frohn	Stippich
		Rev2	02.2.06		Frohn	Eichler

PROJECT NAME: ASU KOSICE

PLANT PART: EXPANDER

AIR LIQUIDE

Air Liquide AGS GmbH
Fütingsweg 34
47805 Krefeld

DRAWING NAME: AIR TO EXPANDER TURBINE 2 NOZZLE ADJUSTMENT FIC 24201 / HIC 24205

SIZE: A3

FUNKTION DIAGRAM

DRWG. NO.: K70101_133.dwg

PROJ. NO.: K70101

REPLACES: REPLACED BY: BASED:

DATE: 17.06.2005
AUTHOR: Frohn
CHECK: Eichler
STD.:

Rang.	Comment	Origin	Type	Signal-/TAG-No.	Path
					1
					2
					3
					4
					5
	Reset trip turbine 2	Software button OS	1	HS 24200	6
					7
					8
					9
	Emergency shut down	ESD button	0	HZ 24200	10
					11
	Deriming turb. 2 on	Software switch OS	1	HS 24206	12
					13
	Trip cold box	from page no.100/60	1	US 20000	14
					15
	Speed expander	Value > Max2	1	SHH 24224	16
					17
	Speed expander	Contact > Max2	0	SHH 24224	18
					19
					20
					21
	Quick shut off valve	from page no.128/75	1	HS 24201	22
	open				23
	Speed expander	Value < Min2	1	SLL 24224	24
					25
	Vibration expander	Value > Max2	1	XHH 24224	26
	Expander 2 on	from page no.137/80	1	HS 24201	27
	Air inlet expander	Value < Min2	1	TLL 24201	28
					29
	Bearing expander	Value > Max2	1	THH 24220	30
	Bearing expander	Value > Max2	1	THH 24221	31
	Bearing expander	Value > Max2	1	THH 24223	32
					33
	Seal gas supply	Value < Min2	1	PLL 24244	34
	Oil press. expander	Value < Min2	1	PLL 24269	35
	Oil press. expander	Contact < Min2	0	PLL 24268	36
	Oil temp. expander	Value > Max2	1	THH 24269	37
	Oil behind gearbox	Value > Max2	1	THH 24251	38
					39
	Bearing generator	Value > Max2	1	THH 24271	40
	Bearing generator	Value > Max2	1	THH 24273	41
					42
	Winding U generator	Value > Max2	1	THH 24275	43
	Winding V generator	Value > Max2	1	THH 24276	44
	Winding W generator	Value > Max2	1	THH 24277	45
					46
	Fail generator	from page no.131/95	1	US 24210_fail	47
					48

Function

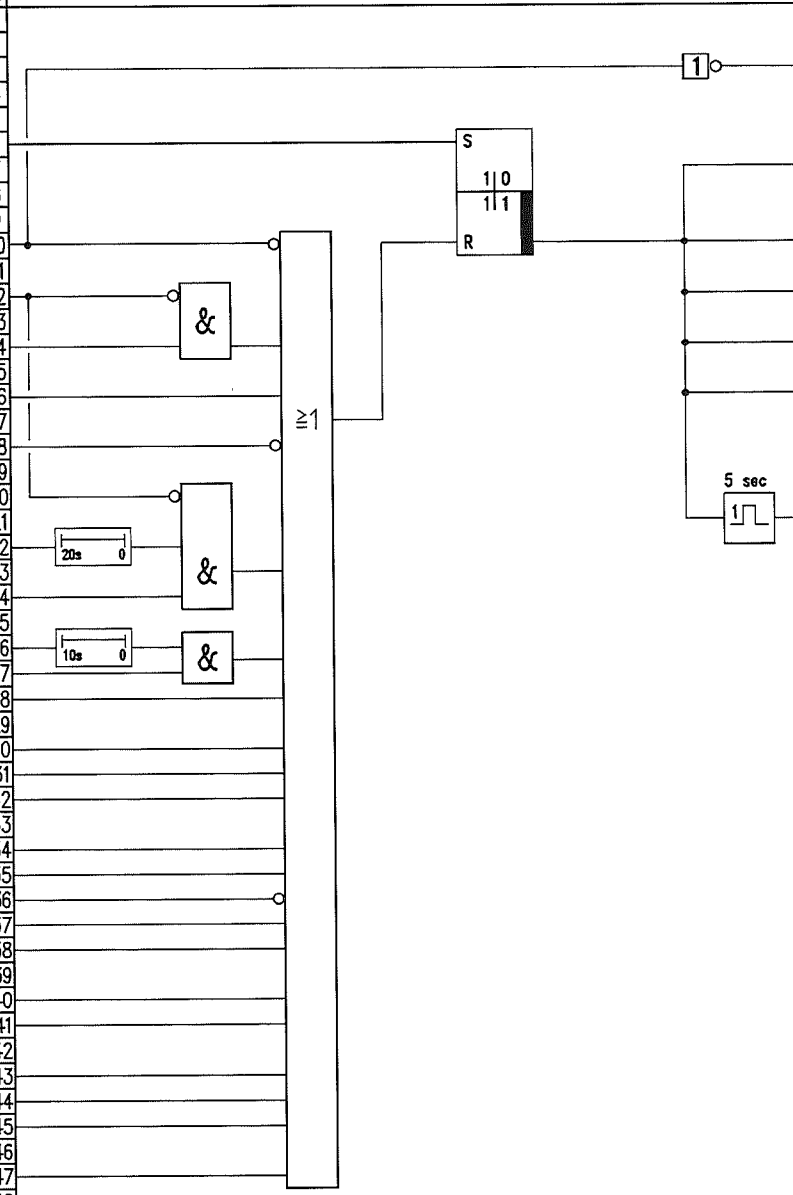

Path	Type	Signal/TAG-No.	Destination	Comment	Rang.
51					
52					
53	1	HA 24200	Alarm OS	"Emergency shut down"	
54				turbine 2	
55					
56					
57	1	UA 24200	Alarm OS	"Trip expander turbine 2"	
58					
59					
60	1	US 24200	to page no. 135/7	Trip expander turb. 2	
61					
62	1	US 24200	to page no. 136/40	Close shut off valve	
63				UK 24201	
64	1	US 24200	to page no. 139/9	Oilpump expander on	
65				HS 24263	
66	1	US 24200	to page no. 140/33	Generator off	
67				US 24210	
68					
69					
70					
71	1	US 24200_dyn	to page no. 133/24	FIC 24201	
72				Contr. manual/Y=0%	
73					
74					
75					
76					
77					
78					
79					
80					
81					
82					
83					
84					
85					
86					
87					
88					
89					
90					
91					
92					
93					
94					
95					
96					
97					
98					

JOB NO.	FILE NO	REV.	DATE	REVISIONS	BY	CHKD.
		Rev3	08.6.07	"as built"	Frohn	Stippich
		Rev2	02.2.06		Frohn	Eichler

PROJECT NAME: ASU KOSICE

PLANT PART: EXPANDER

AIR LIQUIDE

Air Liquide AGS GmbH
Fütingsweg 34
47805 Krefeld

DRAWING NAME: EXPANDER TURBINE 2 TRIP US24200

SIZE: A3

FUNKTION DIAGRAM

DRWG. NO.: K70101_134.dwg

PROJ. NO.: K70101

REPLACES: REPLACED BY: BASED:

DATE: 17.06.2005
AUTHOR: Frohn
CHECK: Eichler
STD.:

Comment	Origin	Type	Signal-/TAG-No.	Path
				1
				2
Auxilary oil pump on	Check back signal	1	EH 24263	3
				4
Speed expander	Value < Min1	1	SL 24224	5
				6
Trip expander turb. 2	from page no.134/60	1	US 24200	7
				8
Nozzle ring closed	End position switch	1	GL 24205	9
Nozzle ring	Y-Value < 1%	1	HIC 24205	10
Air to expander	Output signal Y<1%	1	FIC 24201	11
				12
Deriming mode	from page no.137/57	1	HS 24206	13
				14
Level oil tank	Level switch < Min	0	LL 24260	15
				16
Oil behind cooler	Value > Max1	1	TH 24269	17
Oil press. expander	Value < Min1	1	PL 24269	18
				19
Seal gas to gap gas	Value < Min	1	PDL 24241	20
Seal gas supply	Value < Min1	1	PL 24244	21
				22
				23
				24
				25
				26
Vibration expander	Value > Max1	1	XH 24224	27
				28
Quick shut closed	End position switch	1	GL 24201	29
				30
				31
				32
				33
				34
Air to MHE open	End position switch	1	GH 20026	35
				36
Air exh. BAC open	End position switch	1	GH 16073	37
				38
				39
				40
Top HP-column	Value > Max	1	PH 21002	41
Air exh. expander	P-Transmitter	E	PT 24202	42
				43
Top HP-column	PD-Transmitter	E	PDT 21002	44
				45
HP-column	PD-Transmitter	E	PDT 21003	46
				47
Constant		E	1000	48

Function

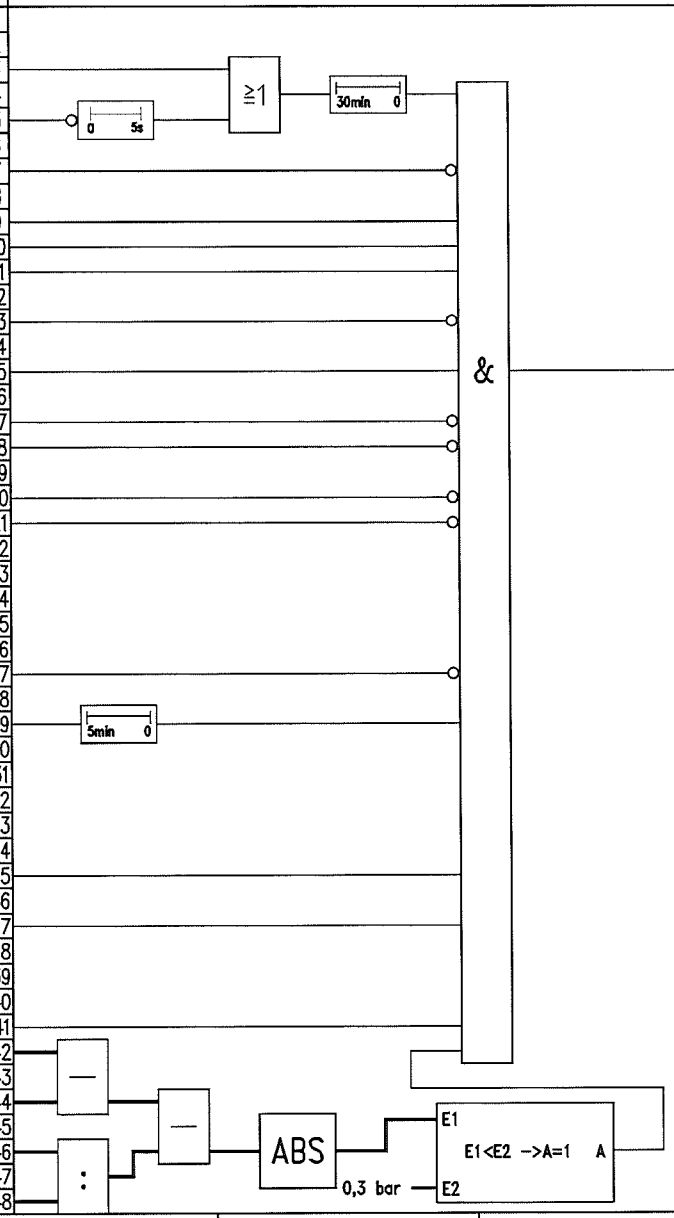

Path	Type	Signal/TAG-No.	Destination	Comment
51				
52				
53				
54				
55				
56				
57				
58				
59				
60				
61				
62				
63				
64				
65	1	EL 24210	to page no. 136/19	Ready to start turb. 2
66				UK 24201
67				
68				
69				
70				
71				
72				
73				
74				
75				
76				
77				
78				
79				
80				
81				
82				
83				
84				
85				
86				
87				
88				
89				
90				
91				
92				
93				
94				
95				
96				
97				
98				

JOB NO.	FILE NO	REV.	DATE	REVISIONS	BY	CHKD.
		Rev3	08.6.07	"as built"	Frohn	Stippich
		Rev2	02.2.06		Frohn	Eichler

PROJECT NAME: ASU KOSICE

PLANT PART: EXPANDER

AIR LIQUIDE

Air Liquide AGS GmbH
Fütingsweg 34
47805 Krefeld

DRAWING NAME:
EXPANDER TURBINE 2
START CONDITIONS EL24210

SIZE: A3

FUNKTION DIAGRAM

DRWG. NO.: K70101_135.dwg

PROJ. NO.: K70101

REPLACES: REPLACED BY: BASED:

DATE: 17.06.2005
AUTHOR: Frohn
CHECK: Eichler
STD.:

Rang.	Comment	Origin	Type	Signal-/TAG-No.	Path
					1
					2
					3
					4
					5
					6
					7
					8
					9
					10
					11
					12
					13
					14
					15
					16
					17
					18
	Ready to start turb.2	from page no.135/65	1	UH 24203	19
					20
					21
					22
					23
					24
					25
					26
					27
					28
					29
					30
					31
					32
					33
	Quick shut off	End position switch	1	GL 24201	34
	butterfly valve				35
	UK 24201				36
					37
					38
					39
	Trip expander turb.1	from page no.134/62	1	US 24200	40
					41
	Deriming mode on	from page no.137/53	1	HS 24206	42
					43
					44
					45
					46
					47
					48

Function

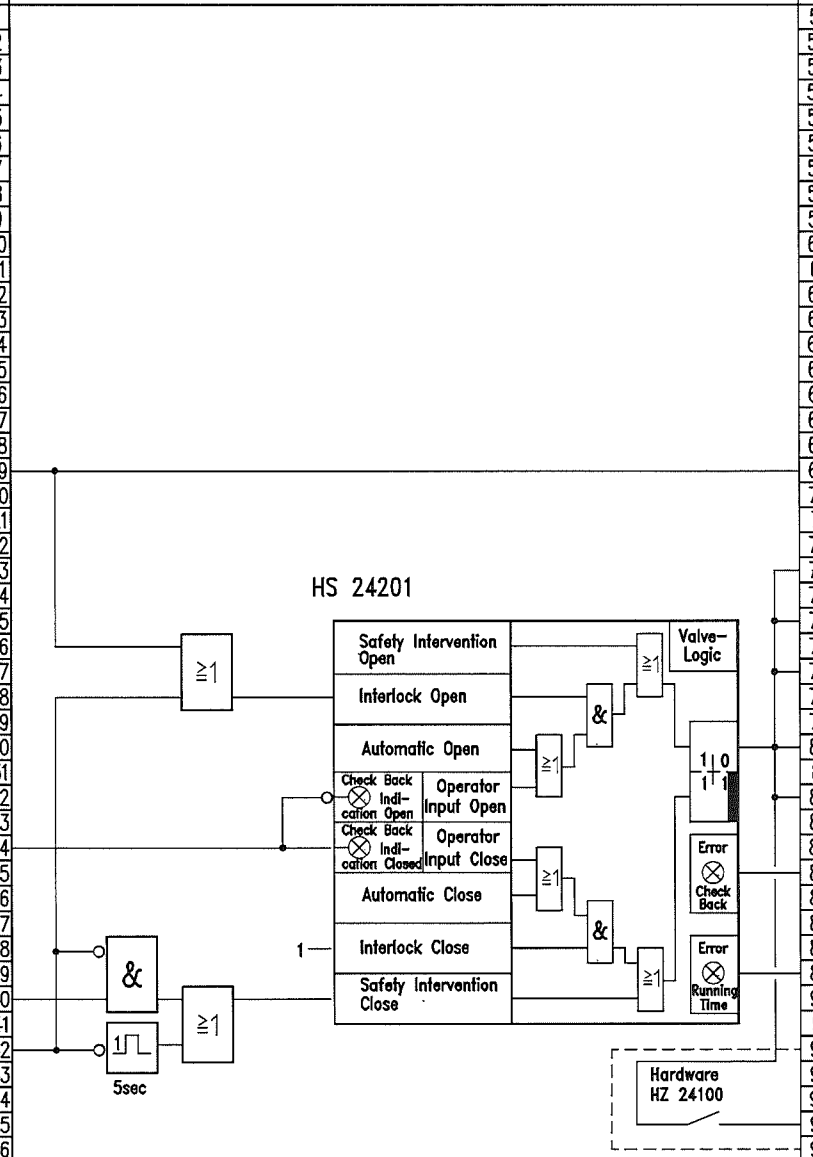

Path	Type	Signal/TAG-No.	Destination	Comment	Rang.
51					
52					
53					
54					
55					
56					
57					
58					
59					
60					
61					
62					
63					
64					
65					
66					
67					
68					
69	1	UOH 24203	Monitoring OS	"Ready to start turb.2"	
70					
71					
72					
73	0	HS 24201	to page no. 140/35	Generator off	
74				US 24210	
75	0	HS 24201	to page no. 134/22	Trip US 24200	
76					
77	1	HS 24201	to page no. 139/29	Oil pump not off	
78			to page no. 139/6	HS 24263	
79					
80	1	HS 24201	to page no. 134/27	Enable vibration	
81				monitoring	
82	1	HS 24101	to page no. 133/27		
83					
84					
85	1	HS 24201_CB	Alarm OS	"Check back error"	
86					
87					
88					
89	1	HS 24201_RT	Alarm OS	"Running time error"	
90					
91					
92					
93					
94					
95	1	HS 24201	Solenoid valve	Open shut off valve	
96			UV 24201 energized	UK 24201	
97					
98					

JOB NO.	FILE NO	REV	DATE	REVISIONS	BY	CHKD.
		Rev3	08.6.07	"as built"	Frohn	Stippich
		Rev2	02.2.06		Frohn	Eichler

PROJECT NAME: ASU KOSICE

PLANT PART: EXPANDER

AIR LIQUIDE

Air Liquide AGS GmbH
Fütingsweg 34
47805 Krefeld

DRAWING NAME:
EXPANDER TURBINE 2
QUICK SHUT OFF BUTTERFLY VALVE
HS 24201

SIZE: A3

FUNKTION DIAGRAM

DRWG. NO.: K70101_136.dwg

PROJ. NO.: K70101

REPLACES: REPLACED BY: BASED:

DATE: 17.06.2005
AUTHOR: Frohn
CHECK: Eichler
STD.:

Rang.	Comment	Origin	Type	Signal-/TAG-No.	Path
					1
					2
	Defrost expander	Software switch OS	1	HS 24206	3
					4
	Shut off valve closed	from page no.135/80	1	GL 24201_delay	5
					6
					7
					8
					9
	Oil pump on	from page no.139/71	1	HS 24263	10
					11
	Nozzle ring drive ET2	End position switch	1	GL 24205	12
					13
	Nozzle valve closed	End position switch	1	GL 24201	14
					15
					16
					17
					18
					19
	Seal gas supply	Value < Min1	1	PL 24244	20
					21
	Oil expander	Contact < Min2	0	PLL 24268	22
					23
					24
					25
					26
					27
					28
					29
					30
					31
					32
					33
	Speed expander	Value > Max	1	SH 24224	34
					35
					36
					37
					38
					39
					40
					41
	Outlet expander	Value > Max	1	PH 24202	42
					43
					44
	Emergency shut down	ESD button	0	HA 24200	45
					46
					47
					48

Function

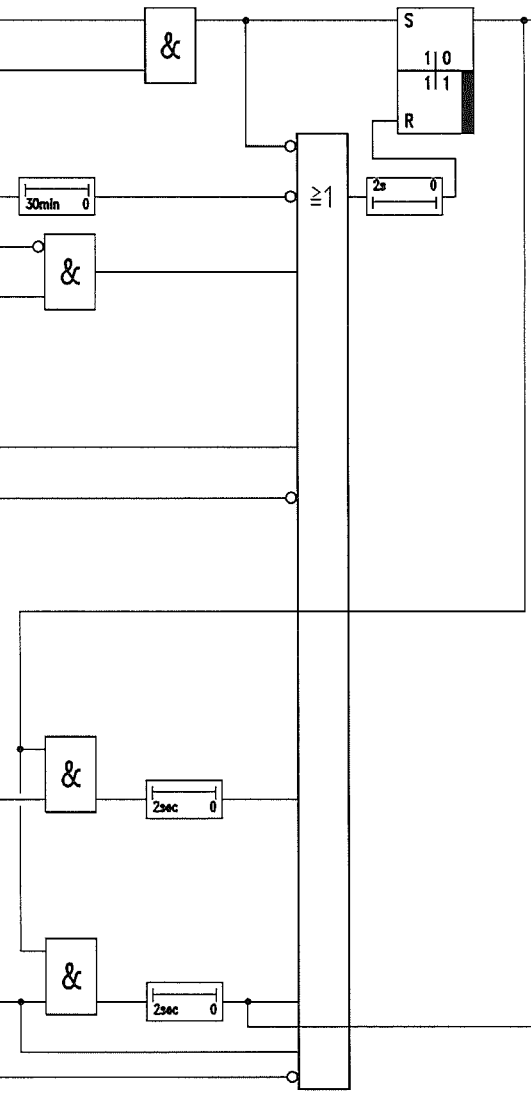

Path	Type	Signal/TAG-No.	Destination	Comment	Rang.
51					
52					
53	1	HS 24206	to page no.136/42	Open shut off valve	
54					
55	1	HS 24206	Monitoring OS	"Deriming mode expander	
56				turbine 2 on"	
57	1	HS 24206	to page no.135/13	Start conditions	
58					
59					
60					
61					
62					
63					
64					
65					
66					
67					
68					
69					
70					
71					
72					
73					
74					
75					
76					
77					
78					
79					
80					
81					
82					
83					
84					
85					
86					
87					
88					
89					
90					
91					
92					
93	1	PAH 24202	Alarm OS	"Pressure outlet exp.	
94				too high"	
95					
96					
97					
98					

JOB NO.	FILE NO	REV.	DATE	REVISIONS	BY	CHKD.
		Rev3	08.6.07	"as built"	Frohn	Stippich
		Rev2	02.2.06		Frohn	Eichler

PROJECT NAME: ASU KOSICE

PLANT PART: EXPANDER

AIR LIQUIDE

Air Liquide AGS GmbH
Fütingsweg 34
47805 Krefeld

DRAWING NAME: EXPANDER TURBINE 2 DERIMING MODE HS24206

SIZE: A3

FUNKTION DIAGRAM

DRWG. NO.: K70101_137.dwg

PROJ. NO.: K70101

REPLACES: REPLACED BY: BASED:

DATE: 17.06.2005
AUTHOR: Frohn
CHECK: Eichler
STD.:

Rang.	Comment	Origin	Type	Signal-/TAG-No.	Path
					1
					2
					3
					4
					5
					6
					7
					8
					9
					10
					11
					12
					13
					14
	Oil heater on	Contact from MCC	1	EH24260	15
					16
					17
					18
					19
					20
					21
					22
					23
					24
					25
					26
					27
					28
					29
					30
					31
					32
					33
	Safety temp. switch	Contact > Max2	1	THH 24260	34
					35
	Level oil tank	Contact < Min	0	LL 24260	36
					37
					38
					39
					40
					41
					42
					43
					44
					45
					46
	Safety temp. switch	Contact > Max	0	TH 24260	47
					48

Function

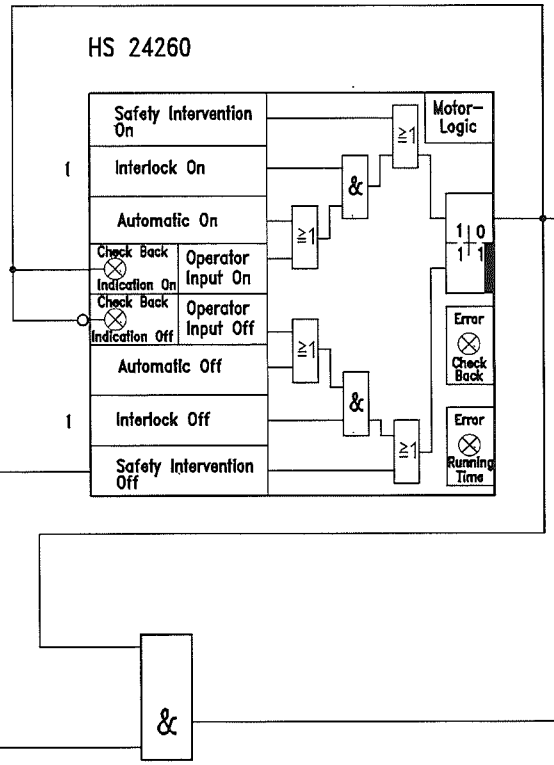

Path	Type	Signal/TAG-No.	Destination	Comment	Rang.
51					
52					
53					
54					
55					
56					
57					
58					
59					
60					
61					
62					
63					
64					
65	1	EOH24260	Monitoring PLS	Oil heater on	
66					
67					
68					
69					
70					
71					
72					
73					
74					
75					
76	1	HS 24260		Oil heater active	
77					
78					
79					
80					
81					
82					
83					
84					
85					
86					
87					
88					
89					
90					
91					
92					
93					
94					
95					
96	1	HS 24260_0	Signal to MCC	Oil heater on	
97					
98					

JOB NO.	FILE NO.	REV.	DATE	REVISIONS	BY	CHKD.
		Rev3	08.6.07	"as built"	Frohn	Stippich
		Rev2	02.2.06		Frohn	Eichler

PROJECT NAME: ASU KOSICE

PLANT PART: EXPANDER

AIR LIQUIDE

Air Liquide AGS GmbH
Fütingsweg 34
47805 Krefeld

DRAWING NAME:
EXPANDER TURBINE 2
OIL HEATER HS24260

SIZE: A3

FUNKTION DIAGRAM

DRWG. NO.: K70101_138.dwg

PROJ. NO.: K70101

REPLACES: REPLACED BY:

DATE: 17.06.2005
AUTHOR: Frohn
CHECK: Eichler
STD.:

BASED:

Rang.	Comment	Origin	Type	Signal-/TAG-No.	Path
	Ex turbine off	from page no.136/77	0	HS 24201	6
	Trip exp. turbine 2	from page no.134/64	1	US 24200	9
	Shut off valve closed	End position switch	1	GL 24201	12
	Temp. oil tank	Value < Min	1	TL 24261	15
	Seal gas supply	Value < Min1	1	PL 24244	17
	Level oil tank	Level switch < Min1	0	LL 24260	19
	Ex turbine on/off	Check back Signal	1	EH 24210	23
	Oil pump on	Check back signal	1	EH 24263	25
	Shut off valve closed	End position switch	1	GL 24201	27
	Speed expander	Value < Min1	1	SLL 24224	28
	Shut off expander	from page no.127/77	1	HS 24201	29
	Seal gas supply	Value < Min2	1	PLL 24244	34
	Shut off valve closed	End position switch	1	GL 24101	36
	Reset trip exp. turb.2	Reset button OS	1	HS 24200	40

Function

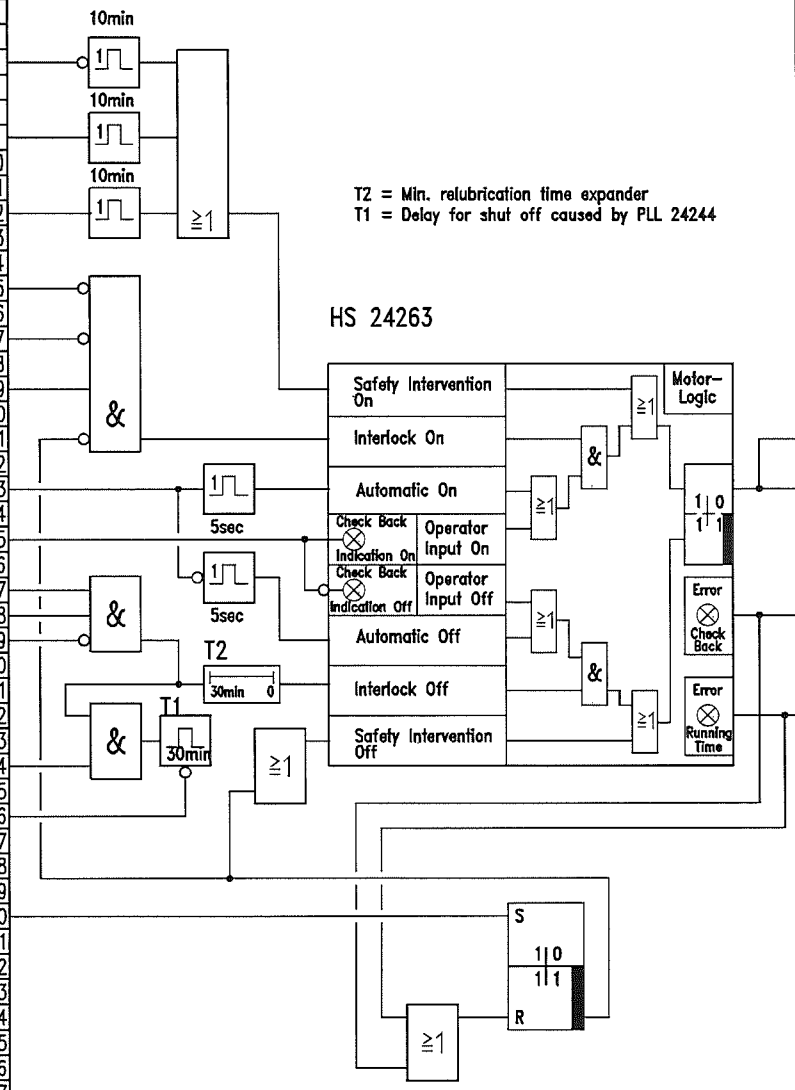

Path	Type	Signal/TAG-No.	Destination	Comment	Rang.
71	0	HS 24263	to page no.137/10	Deriming mode off	
72				HS 24206	
73	1	HS 24263	Signal to MCC	Oil pump P24263 on	
78	1	HS 24263_CB	Alarm OS	"Check back error"	
82	1	HS 24263_RT	Alarm OS	"Running time error"	

JOB NO.	FILE NO.	REV.	DATE	REVISIONS	BY	CHKD.
		Rev3	08.6.07	"as built"	Frohn	Stippich
		Rev2	02.2.06		Frohn	Eichler

PROJECT NAME: ASU KOSICE

PLANT PART: EXPANDER

AIR LIQUIDE

Air Liquide AGS GmbH
Fütingsweg 34
47805 Krefeld

DRAWING NAME:
EXPANDER TURBINE 2
AUXILIARY OIL PUMP HS24263

SIZE: A3

FUNKTION DIAGRAM

DRWG. NO.: K70101_139.dwg

PROJ. NO.: K70101

REPLACES: REPLACED BY: BASED:

DATE	17.06.2005
AUTHOR	Frohn
CHECK	Eichler
STD.	